IMI HEIMEIER

Made in Germany

DX

1x

011

6700-00.500

4 024052 149402 6

IMI Hydronic Engineering

11.

IMI Hydronic Engineering

011

IMI HEIMEIER

IMI Hydronic Engineering

DX

IMI HEIMEIER

IMI Hydronic Engineering

IMI HEIMEIER

IMI Hydronic Engineering

DX

IMI HEIMEIER

IMI Hydronic Engineering

imi-hydronic.com

Made in Germany

IMI HEIMEIER

6700-02.419 Index 01
11.15

imi-hydronic.com

1.

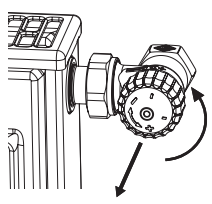

2.

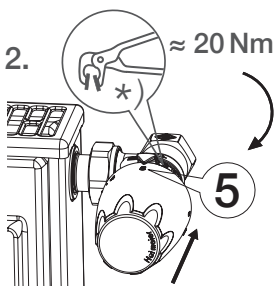

*)

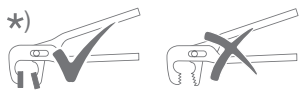

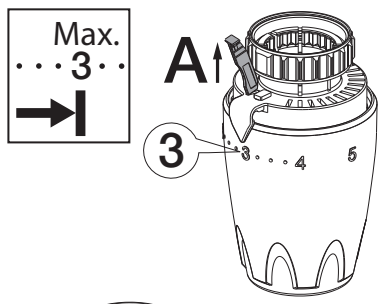

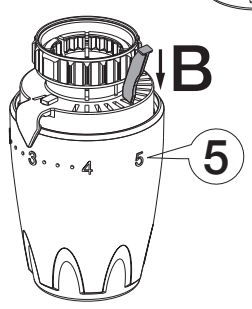

IMI HEIMEIER

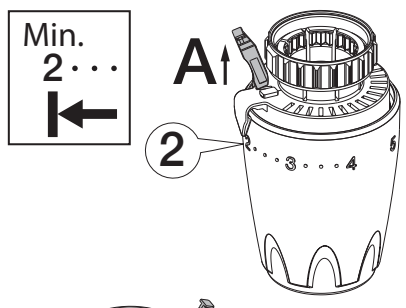

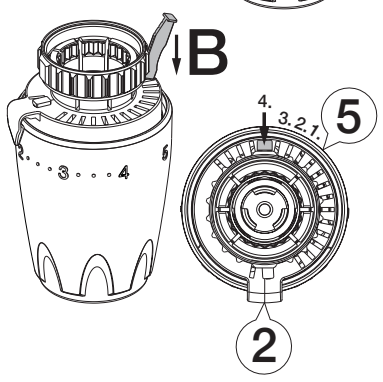

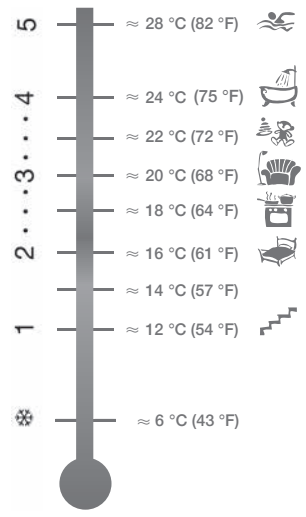
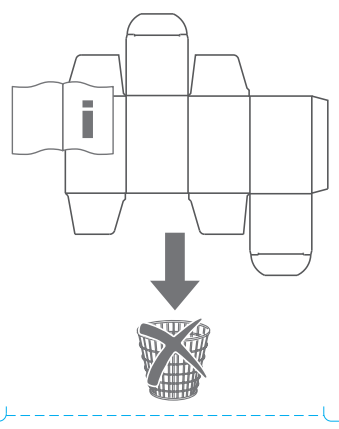
IMI HEIMEIER