Max operating pressure:	10 bar
System temperature	-10/+110 °C
Membrane temperature:	-10/+100 °C
Factory precharge:	1.5 bar ±20%
Nominal volume:	12 L
Colour:	White

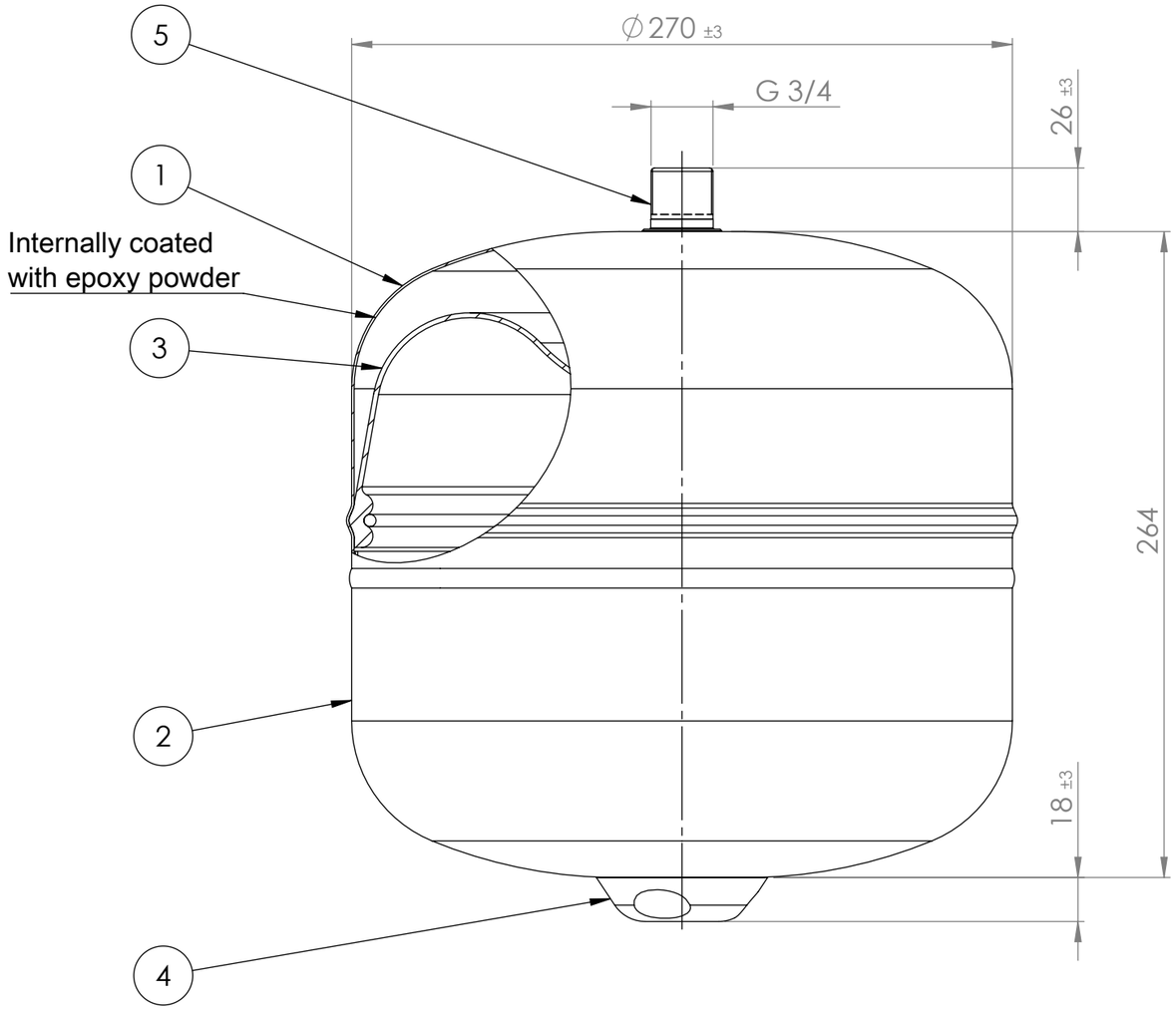

Pos.	Denomination	Q.ty	Material
1	UPPER SHELL	1	CARBON STEEL
2	LOWER SHELL	1	CARBON STEEL
3	MEMBRANE	1	ZILAN SOLAR
4	PRECHARGE VALVE	1	-
5	THREADED NOZZLE	1	ZINKED CARBON STEEL
6	SELF-ADHESIVE LABEL	1	-
7	--	-	-
8	--	-	-
-	--	-	-

Revisioni		
Rev.	Descrizione	Data
00	Issued for costruction	26/04/2022

ZILMET®
Zilmet S.p.a.
Via del Santo,242
35010 Limena (PD)-ITALY
Tel. +39 049 7664901
Fax +39 049 767321
www.zilmet.com
zilmet@zilmet.it

DENOMINATION
SOLAR PLUS EXTRA 12L

DRAWING N° **20016**

SCALE 1:2.5

MATERIAL SEE TABLE

*:Tolerance variation bigger/lower than 20% do not compromise the expansion vessel functioning

DRAWN GIBIN G.	DATE 26/04/2022	Signature
CHECKED FALCOMER S.	DATE 26/04/2022	Signature
APPROVED S.ri BENETTOLO	DATE 26/04/2022	Signature

CODE **11A2001218**

Dimensions in mm [inch]

This drawing is the property of company Zilmet S.p.a. All rights reserved.

A3

All dimension tolerances not indicated are ± 2% for lenght and ± 3mm for diameter