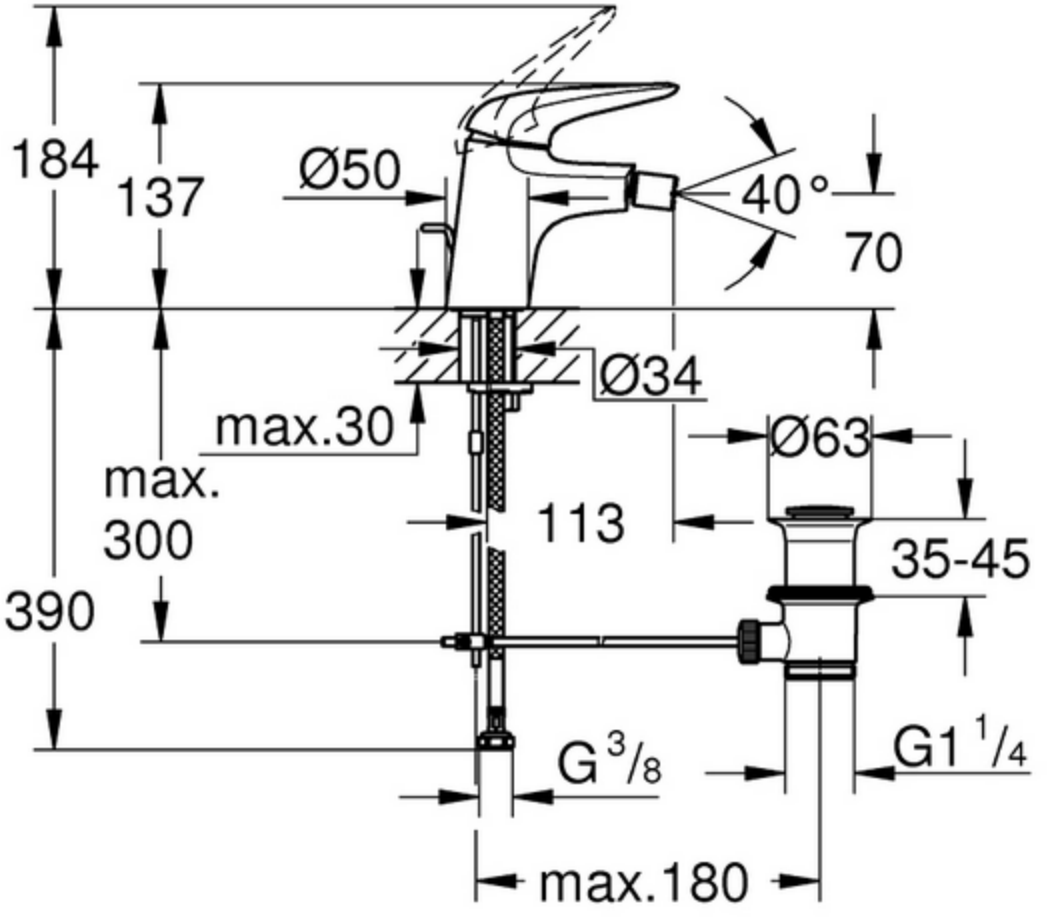
184
137
Ø50
40°
70
Ø34
max.30
max.
300
390
113
Ø63
35-45
G 3/8
G1 1/4
max.180

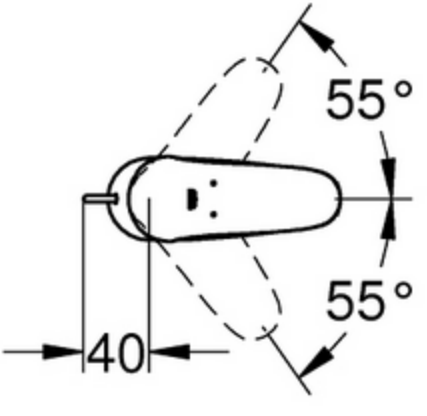
55°
55°
40