ELTRA HILZINGER
ELEKTROWÄRMETECHNIK

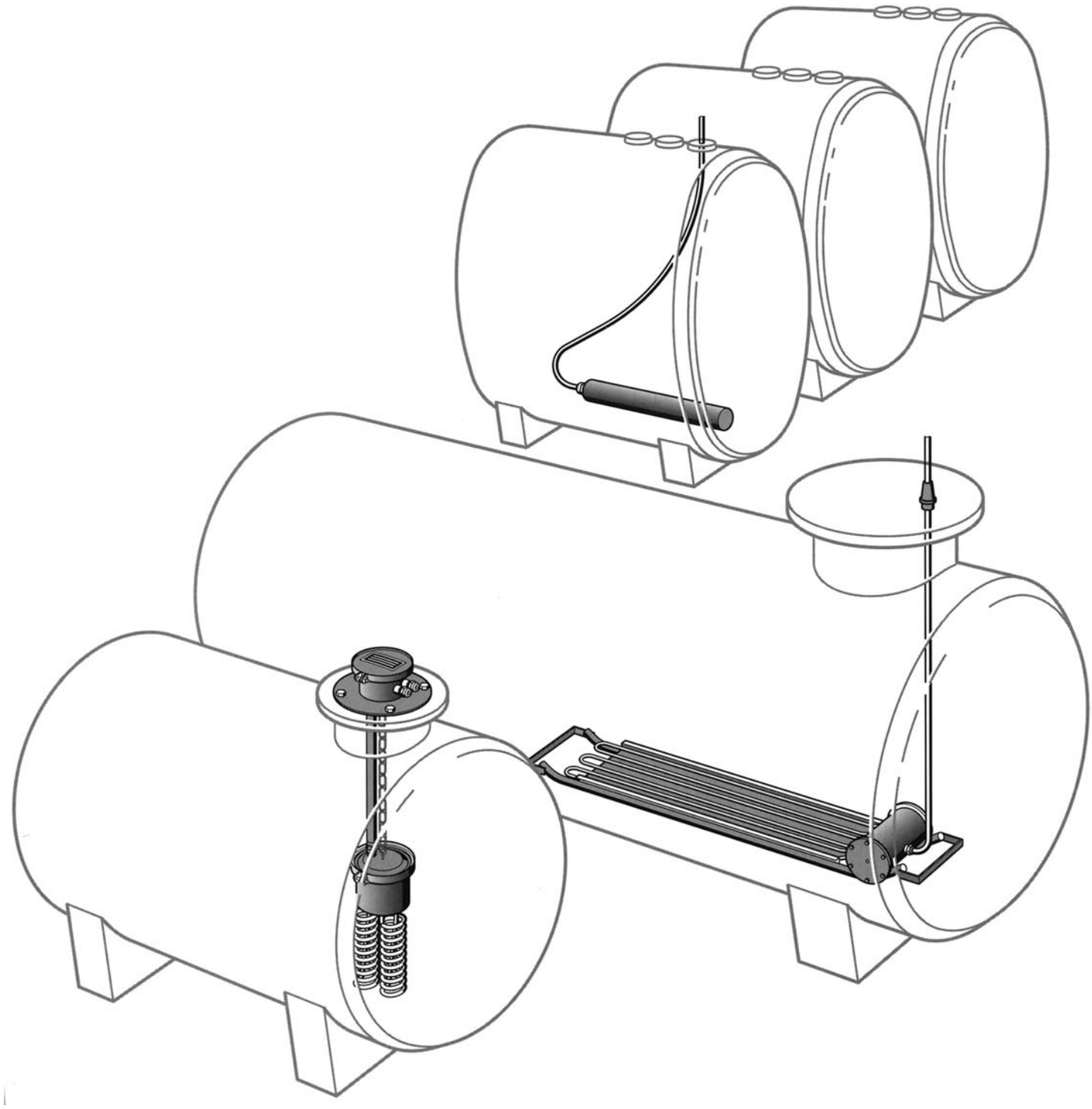

Tank Heaters

Zoppas Industries

Tank Heaters TH 370 / TH 372

Applications

Hilzinger TH 370 and TH 372 Tank Heaters are a reliable way of preventing the separation of paraffin wax from light heating oil when the temperature falls, and maintaining the pump and jet viscosity of oil in the vicinity of the suction line.
Hilzinger Tank Heaters are suitable for tanks holding between **2000** and **8000 litres** in residential and industrial premises. They can be installed in both steel and plastics tanks.
Important: in plastics tank batteries with near-surface suction, we recommend using a tank heater in each individual tank.
The tank heaters are **not suitable** for use in tanks containing hazard class **A I** and **A II** inflammable liquids, **nor for mixtures with A III**.

Execution

To **VDE 0720** and the technical regulations for inflammable liquids **TRbF 220**.6.8.
With TÜV inspection report.

Construction

The watertight body of the heater is made of uncoated steel, and has protection class IP 68. A temperature regulator, and a thermal safety cut-out to limit the maximum oil temperature are built in. The specific heat flow lies between 0,8 and 3 Watt/cm². The oil-resistant connection lead is 4 m long for the TH 370 and 6 m for the TH 372.
Important: the tank heater must be connected to a main switch with a warning light (**not** included in our scope of supply).

Operation

The temperature is automatically controlled between +8°C and +12°C.
The built-in thermal cut-out is set so that the temperature of the heating oil can not exceed its flash point (+55°C).

Requirements for installation

- To install the tank heaters an opening is needed of at least **46 mm dia.** for the TH 370 or **48 mm dia.** for the TH 372.
- In order to warm the oil near the suction port, the heater body should be placed **very near**, or **preverably beneath the port**. Tace care to fulfil the **TRbF 220**.6.8 **regulation** which states: "The opening of the operative pick-up point (suction pipe) must be positioned so far above the heater component that at the lowest possible liquid level it is sufficiently (by at least 50 mm) covered with liquid." If necessary the suction pipe must be shortened to meet this condition.
- For the connection lead a hole 7.6 mm dia. is needed.
- The tank heater must be positioned in the tank so that the heater body is resting on the tank floor **over its entire length**.
- Please read the Assembly and Installation Instructions for further advice on correct fitting.

Hilzinger reserves the right to make technical changes.

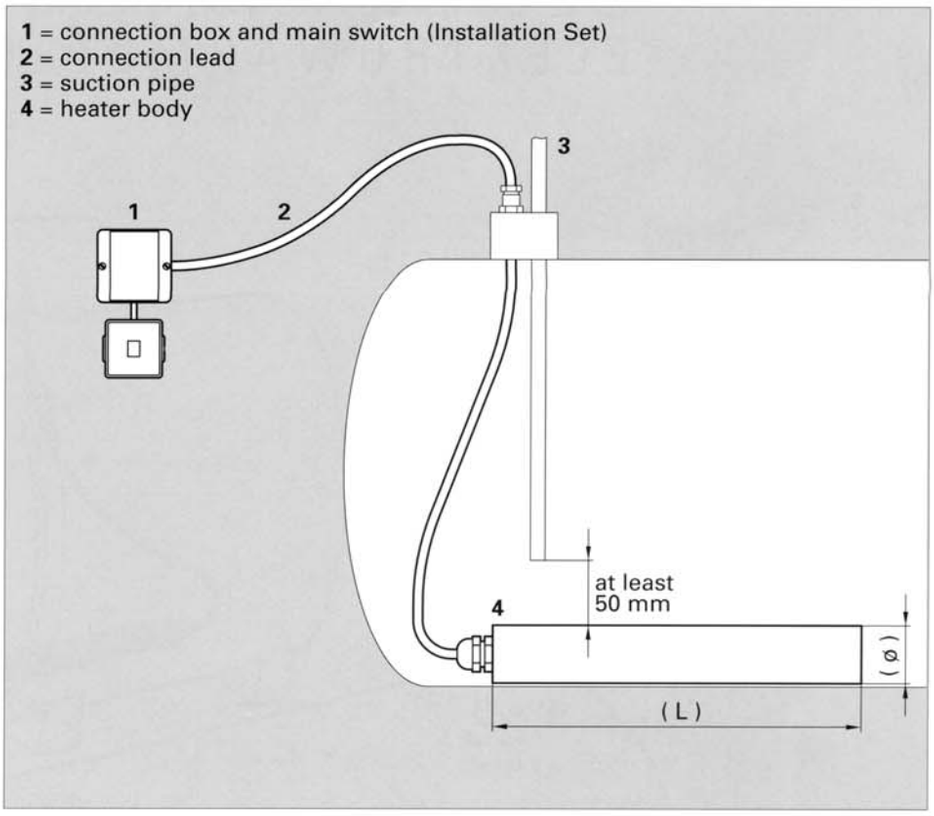

Model	TH 370	TH 372
Suitable for tank capacities up to	ca. 2000 l	ca. 8000 l
Power	220 W	1500 W
Mains supply	1/N/PE AC 230 V	230 V
Specific heat flow	ca. 0,8 W/cm²	ca. 3 W/cm²
Lenght of heater body (L)	466 mm	687 mm
Diameter of heater body	44 mm	47 mm
Connection lead length	ca. 4 m	ca. 6 m
Order no.	105545	105546

Not includet in scope supply

Installation Set for TH 370 and TH 372
– 1 connection box and fastenings
– 1 main switch
Order no.107891

Service Tank Heater TH 376

ELTRA HILZINGER

Applications

The Hilzinger TH 376 Service Tank Heater is intendet for the maintenance technician. It is **not** designed for continuous duty, and should be carried in the maintenance company's service van. It is suitable for **short-period** duty in steel and plastics tanks (including tank batteries).
This tank heater is **not suitable** for use in tanks containing hazard class **A I** and **A II** inflammable liquids, **nor for mixtures with A III**.

Execution

To **VDE 0720** and the technical regulations for inflammable liquids **TRBF 220**.6.8.
With TÜV inspection report.

Construction

The watertight body of the heater is made of uncoated steel. It has protection class IP 68, and a perforated tubular protection screen. A temperature regulator, and a termal safety cut-out to limit the maximum oil temperature are built in.The oil-resistant connection lead is about 6 m long with a 230 V AC mains plug, and a moveable plate to prevent the plug from falling into the tank.

Operation

The Hilzinger Service Tank Heater is intended for dissolving wax that has already settled out of the heating oil, making the oil liquid again, so that a heating plant which has broken down can be rapidly put back into service.
The high power of the heater makes this possible. The temperature regulator and thermal cut-out are set so that the temperature of the heating oil can not exceed its flash point (+55°C).

How to use the Service Tank Heater

- To pass the heater into the tank requires an opening at least **48 mm dia**.
- The heater should be placed as close as possible to the suction pipe.
- Use any available free opening in the tank, or undo the connection for the suction fitting and pass the heater through that.

Important: the service tank heater must be positioned in the tank so that the heater body rests on the tank floor **over its entire length**.
Please observe the instructions, that are printed on the moveable plate, at all times.

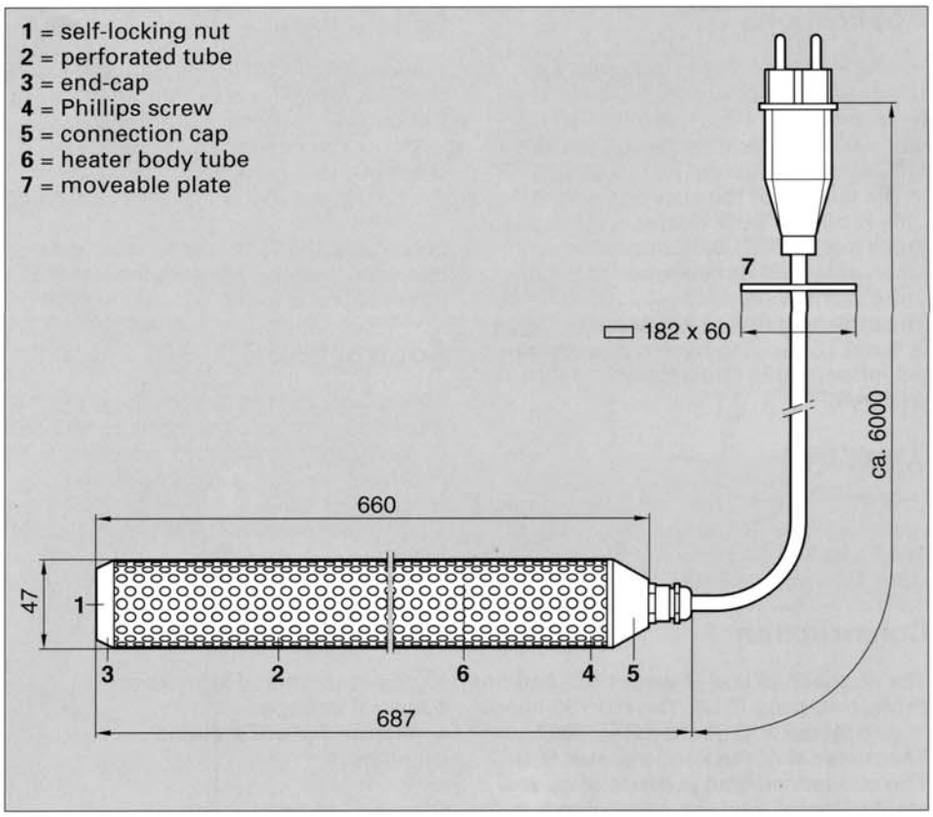

Model	TH 376
Power	2000 W
Mains supply	1/N/PE AC 230 V
Lenght of heater body	660 mm
Diameter of heater body	47 mm
Lenght of connection lead with plug	ca. 6 m
Order no.	105 547

Trubleshooting

If, due to unusual circumstances, the temperature cut-out has been activated, the **maintenance technician** can reset it. This should be carried out as follows (the figures in brackets refer to the illustration above):

- Undo the M5 self-locking nut (**1**) on the heater body.
- Pull the end cap (**3**) and the perforated tube (**2**) back about 150 mm.
- Undo the M3 Phillips screws (**4**).
- Draw the connection cap (5) about 150 mm out of the tube (**6**).
- The temperature cut-out and its reset button are then visible.
- Press the button to reset the cut-out.
- Reassemle in the reverse order to that described above.
- Only tighten the M5 self-locking nut (**1**) so far that the perforated tube (**2**) can just be turned.

Please tak great care that the O-ring in connection cap (**5**) is **not damaged**.

Hilzinger reserves the right to make technical changes.

Tank Heaters TH 380

Applications

Hilzinger TH 380 Tank Heaters are a reliable way of preventing the separation of paraffin wax from light heating oil when the temperature falls, and maintaining the pump and jet viscosity of oil in the vicinity of the suction line.
This Hilzinger Tank Heater is suitable for tanks from which such quantities are taken as would be required for continuous burner operation.
The tank heaters are **not suitable** for use in tanks containing hazard class **A I** and **A II** inflammable liquids, **nor for mixtures with A III**.

Execution

VDE 0700 (EN 60335-1) and the technical regulations for inflammable liquids **TRbF 220**.6.8.
With TÜV inspection report.

Construction

The connection box is watertight and has protection class IP 66. The NB 150 flange is zinc plated and painted RAL 7001.
The material of the flange gasket is Gr.2.
The connection lead is made of oil-resistant material, and the cable glands are oil-tight.
Both the connection head of the heater body and the support chain, which is used to accommodate various depths of installation, are zinc plated.
A temperature regulator, and a thermal safety cut-out to limit the maximum oil temperature are built in. The electric heater element is in uncoated tubular steel. The specific heat flow is ca. 4 Watt/ cm^2.

Operation

Automatic control of temperature between +3°C and +8°C (in conjunction with control box STH 381). The thermal cat-out is set so that the temperature of the heating oil can not exceed its flash point (+55°C).

Installation

A surface 220 mm dia. is required on the tank roof. The heater body will pass through a 150 mm dia. hole within this surface. The flexible electrical lead and chain mounting make it easy to adapt the heater to different tank heights or diameters.
Important: the tank heater may not be operated without its electrical controller (Control box STH 381).

Control box STH 381

This is made of impact-resistant plastic. It is fitted with an on/off switch, and has control lights for heating, control current, and fault. It also contains overload protection and fuses. It provides protection against jets of water (protection class IP 55).
Dimensions (LxBxH): 250x150x375 mm.

Extras

- greater depths of immersion
- special voltages
- versions for other media

on request.

Please note

For outdoor tanks from which large quantities may be taken at frequent intervals (e.g. distributor's tanks), it is necessary to maintain the whole contents of the tank up to temperature.
For such cases Hilzinger has developed the TH 383 Tank Heater.

Hilzinger reserves the right to make technical changes.

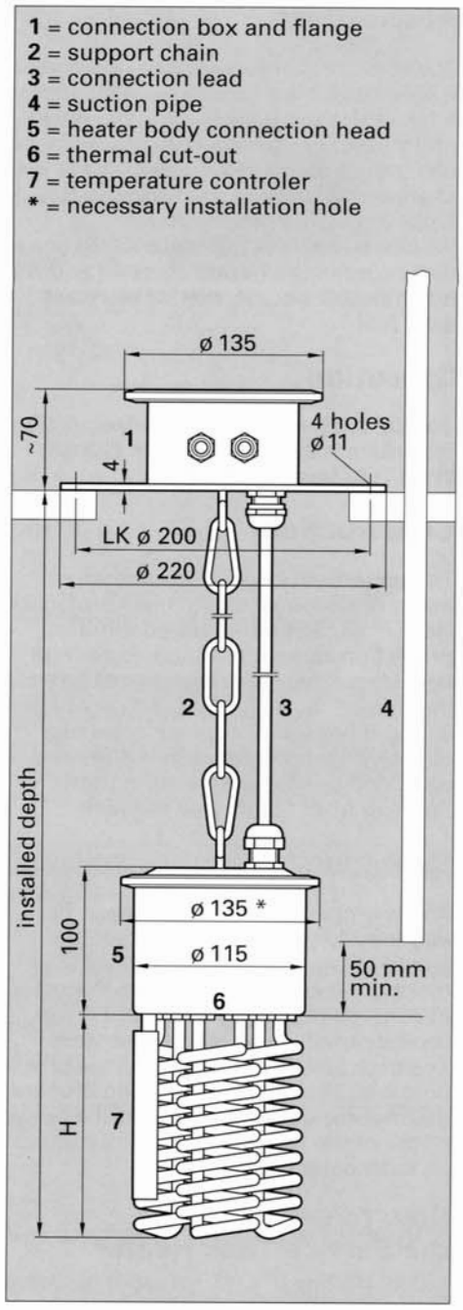

Tank Heater model	Order no.	Power kW	Mains supply V	Height (H) mm	Installed depth mm	Control box model	Order no.
TH 380-41	111 034	3,0	3/N/PE AC 400 convertible 1/N/PE AC 230	127	variable up to 2950	STH 381-32	111 038
						STH 381-31	111 039
TH 380-42	111 035	4,5	3/N/PE AC 400	155		STH 381-32	111 038
TH 380-43	111 036	6,0	3/N/PE AC 400	200		STH 381-32	111 038
TH 380-44	111 037	7,5	3/N/PE AC 400	245		STH 381-32	111 038

Tank Heaters TH 383

ELTRA HILZINGER

Applications

Hilzinger TH 383 Tank Heaters are intendet for outdoor tanks from which large quantities may be taken at frequent intervals (e.g. distributor's tanks).
In such cases it is necessary to maintain the whole contents of the tank up to temperature.
When the oil temperature falls too low paraffin wax separates out, the oil becomes viscous, and finally can not be sucked into the pump. Filters and pipelines become blocked.
Hilzinger Tank Heaters prevent the separation of paraffin wax and ensure that the oil has a suitable temperature and consistency for use.
Important: TH 383 Tank Heaters are **not suitable** for use in tanks containing hazard class **A I** and **A II** inflammable liquids, **nor for mixtures with A III**.

Execution

To **VDE 0700 T1** and **T15** and the technical regulations for inflammable liquids **TRbF 220**.6.8.
With TÜV inspection report.

Construction

In principle the TH 383 consists of three permanently connected components:

- connection head, protection class IP 68, stainless steel (mat.no.1.4306) uncoated tubular heater, stainless steel (mat.no.1.4301) uncoated tank heater.
- connection leads of oil-resistant material with cable glands for tank roof and connection box.
- control cabinet made of impact-resistant thermoplastic with main switch, signal lights for operation, heating, and fault, and a display for actual/set temperature.

Connection cable 9x2,5 mm², 15 m long, permanently connected.

Operation

Operation is regulated from the control cabinet. The target temperature is set in our works to 10°C, but can be changet at any time. The display shows the current temperature of the oil. A white control lamp shows that the heaters are in operation, until the set temperature is reached. In the event of a fault, a red signal lamp illuminates and an acoustical warning is given.

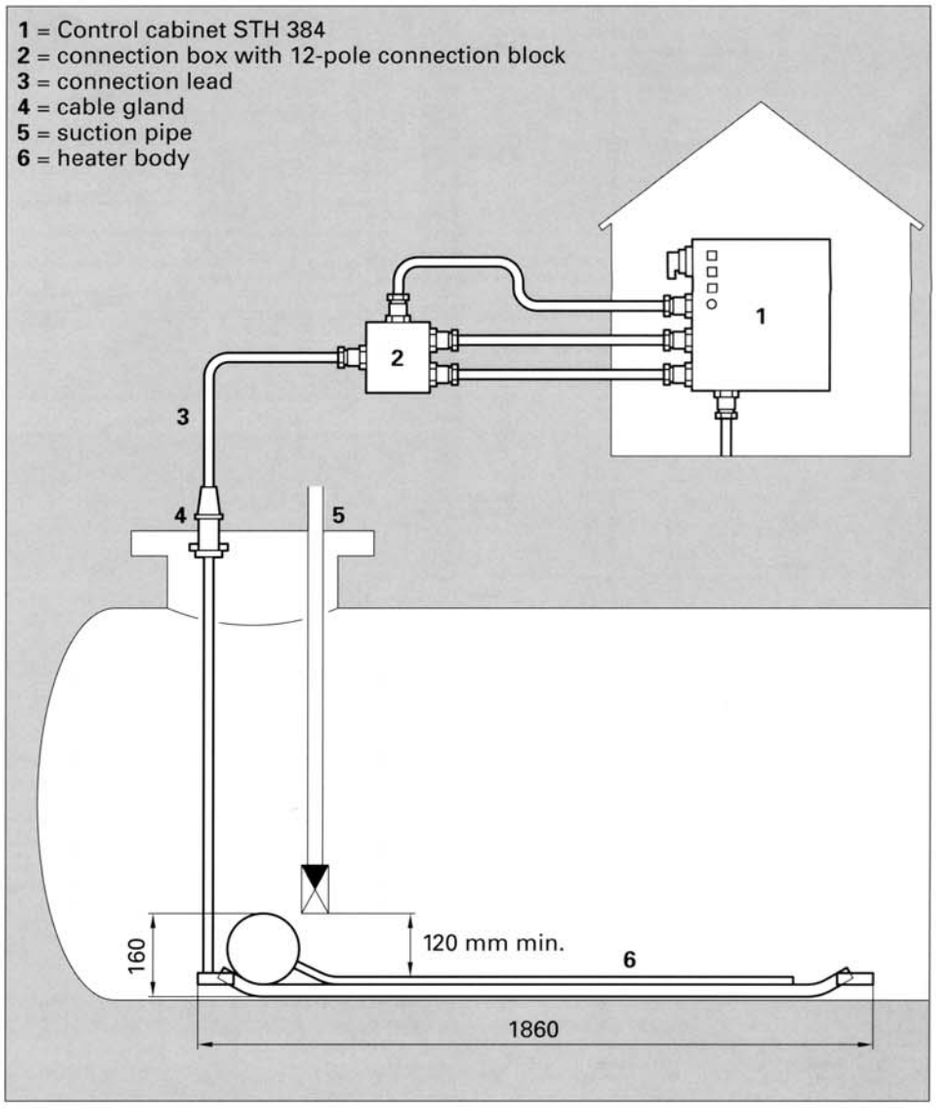

Model	Order no.	Power kW	Sp.heat flow W/cm2	Mains supply* V	Dimensions LxBxH mm	Weight kg
TH 383.03	107 008	3	1,32	3/N/PE AC 400	1860x240x160	ca.15
TH 383.01	106 942	6	2,65			
TH 383.02	106 941	9	4,00	* other voltages on request		

Installation

The heater lies on the floor of the tank. All corners are radiused so that even lined tanks can not be damaged.
The connection passes through a cable gland and a simple 28 mm diameter hole in the tank roof.
Naturally, if the circumstances (tank volume and/or temperature) call for it serval TH 383 heaters can be installed, **each with its own control cabinet.**

Control Cabinet STH 384

Protection class: IP 65.
Max. input power: 9 kW.
Mains supply: 3/N/PE AC 400 V, other voltages on request.
Dimensions (LxBxH): 300x300x170.
Weight: 5,1 Kg.

Hilzinger reserves the right to make technical changes.

Tank Heaters TH 380 / TH 383

Find in the following schedule the needed power for the taking out of heating oil in liter per hour in accordance to the temperature increasing in °K. Generally, the switch-off temperature of the tank heaters is adjusted to max. + 10°C.

SCHEDULE:

Tank heater Type		Temperature increasing in °K					
		10	**15**	**20**	**25**	**30**	**35**
TH 380 – 34 Power 7,5 kW	**Taking out in l/h**	1050	700	525	420	350	300
TH 380 – 33 Power 6,0 kW		865	580	430	345	290	250
TH 380 – 32 Power 4,5 kW		670	430	330	270	220	190
TH 380 – 31 Power 3,0 kW		450	300	225	180	150	130
TH 372 Power 1,5 kW		235	150	120	100	80	70
TH 370 Power 0,22 kW		32	20	16	13	10	9

NON-OBLIGATORY APPROXIMATE VALUE!

Loss of heating due to bad or not isolated pipes as well as unfavourable places of the tank, e. g. unprotected places outdoor, are not considered in the schedule. In this cases you should choose the next in rank power.

NON-OBLIGATORY values for capacity

Boiler up to	2,000 l	0,22 kW
Boiler up to	8,000 l	1,5 kW
Boiler up to	16,000 l	3,0 kW
Boiler up to	30,000 l	4,5 kW
Boiler up to	60,000 l	6,0 kW
Boiler up to	100,000 l	7,5 KW

Connection diagramms

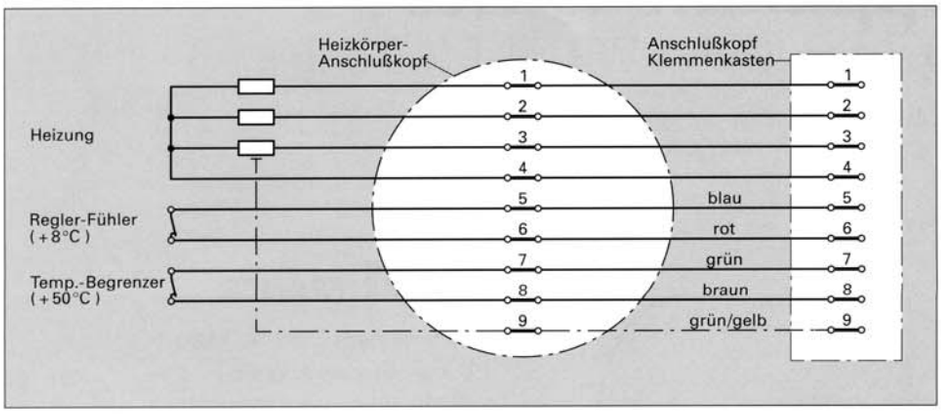

1

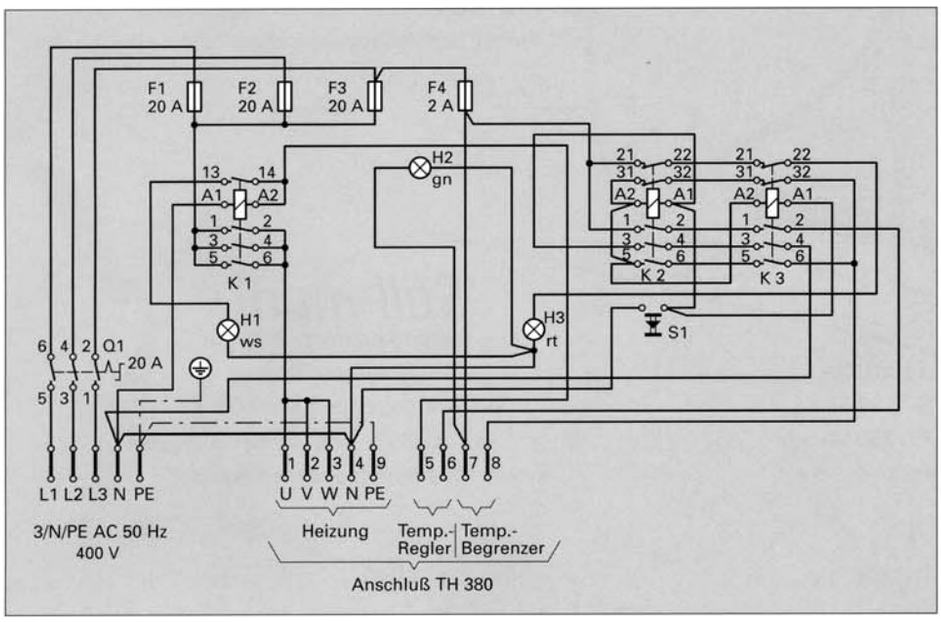

2

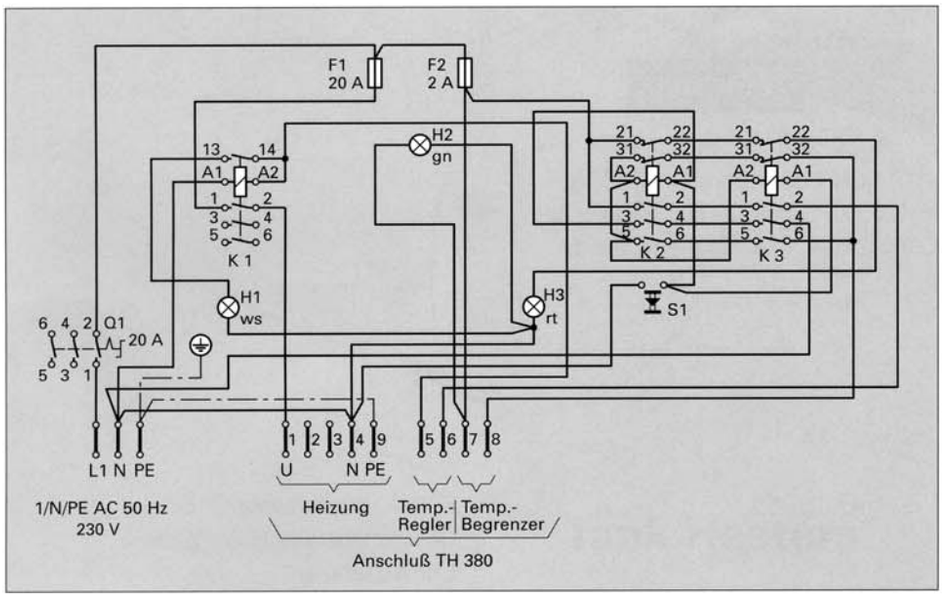

3

Zoppas Industries

RICA

Via Podgora 26
I-31029 Vittorio Veneto (TV)
Tel: +39 0438/910-1 - Fax: +39 0438/912236 - 912272
http:// www.rica.zoppas-industries.it
E-mail: rica@zoppas-industries.it

RICA FRANCE

Zone d'activité de la Croix St. Marc
12, Rue Jacques Anquetil
F-93600 Aulnay sous Bois
Tel: +33 1/48686473 - Fax: +33 1/48799847
E-mail: rica_fr@zoppas-industries.it

irca UK
Industrial Division
Unit 11 & 12 - Tafarnaubach - Ind. Estate
UK-Tredegar, Gwent, South Wales, NP2 3AA
Tel: +44 1495/725555 - Fax: +44 1495/725544
E-mail: irca_uk@zoppas-industries.it

Still-man
Heating products Inc.
1011 Volunteer Drive
U.S.A.-Cookeville TN 38503
Tel: +1 931/5263351 - Fax: +1 931/5281368
E-mail: still-man@zoppas-industries.it

ELTERM

Rua Cícero Borges de Morais, 584
06407-900 - Barueri - SP - Brazil
Tel: +55 11/72983370 - Fax: +55 11/72984210
E-mail: elterm@elterm.com.br

ELTRA

ELTRA Heizelemente GmbH
Robert-Bosch-Straße 18 - D-64319 Pfungstadt
Phone: +49 +61 57/80 08-0 - Fax: +49 +61 57/8 56 45
Internet:http://www.eltra.de - e-mail: eltra@zoppas-industries.it

08/2000 - 500