ELTRA HILZINGER
ELEKTROWÄRMETECHNIK

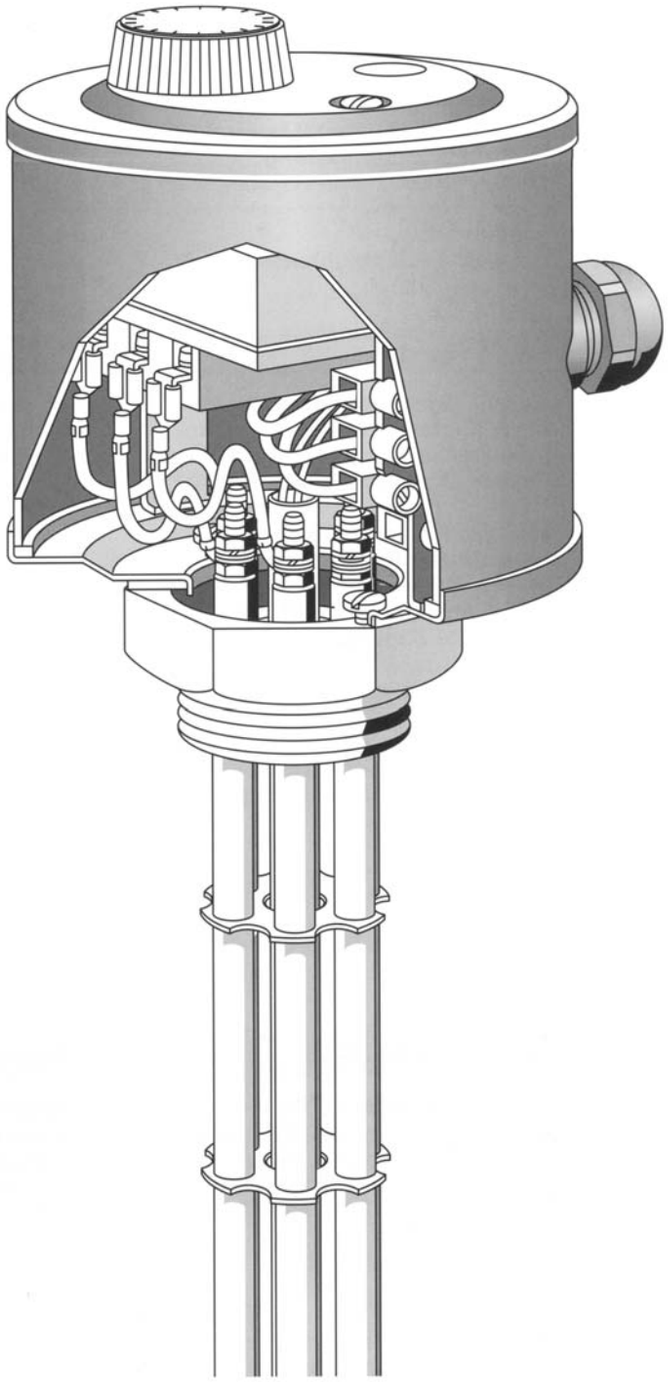

Immersion Heaters

Zoppas Industries

Immersion Heaters

Introduction

The screw-in heater consists of three heater elements in copper, steel, or stainless steel tubes. These are bent into a U-shape, and hard soldered into a brass, steel, or stainless steel fitting with G 1 1/2 B male thread, and 60 mm A/F flats. Cadmium-free solder is used. Screw-in heaters are approved for heating drinking water.
The stainless steel connection box can be clamped in any position, so that, after the heater has been screwed in, the cable gland can be turned to any desired location.
Screw-in heaters with stainless steel connection boxes have defined IP protection classes to DIN 40050.
They are manufactured to comply with DIN 44922, and VDE 0700 Part 1 or Part 253.
In addition, the screw-in heaters are subjected to a final acceptance test to VDE 0720.

Installation

Screw-in heaters must be installed so that the heated portion is completely immersed in liquid. They may be installed horizontally or vertically.
The installer must take precautions to protect against dry operation, such as including a float switch or similar device in the system.
For heating gaseous media, the special instructions given on page 10 must be followed.
For sealing, asbestos-free filled metallic gaskets (48 x 55 x 2.5 mm) should be used. For thin walled, open con-tainers, we recommend use of a lock-nut. Both these parts can be ordered from us. When installing the heater in a container, the relevant local rules and regulations must be observed.
The screw-in heaters are approved for use at pressures up to 30 bar.
To prevent failure of a screw-in heater due to over-heating or corrosion, suitable measures must be adopted to remove any deposits that may form on it. Screw-in heaters have many applications and can be used in the normal way.

Connections

As a rule, screw-in heaters have 3 tubular heating elements for 230 V or 400 V, and they may be connected in the following ways:
Heating elements in parallel
1/N/PE AC 230 V
Delta connection of the heating elements
3/PE AC 400 V
Star connection of the heating elements
3/N/PE AC 400/230 V
See page 7 for connection diagrams.

Electrical supply

The electrical connection may only be made by an authorised electrician in accordance with local regulations and the requirements of the electricity supply company. This applies also in the event of a breakdown or repair work.
Depending on the size of the cable gland fitted to the cap of the screw-in heater, the cable diameters given below may be used:

PG 9	3-8 mm
PG 13.5	5-12 mm
PG 16	6-13 mm

Special versions

Beside the various electrical connections, screw-in heaters can be supplied with temperature regulators and/or temperature limiters. See page 11 for possible combinations. Screw-in heaters with special screw-threads, or different temperature ranges for the control elements are available on request.
The products in our standard lists are normally available from stock.

Immersion Heaters

Caps

Connection cap
Models X, V, and D
Protection class IP X6

1 = cable gland Pg 9
with control lamp
2 = cable gland Pg 16, 13, or 9

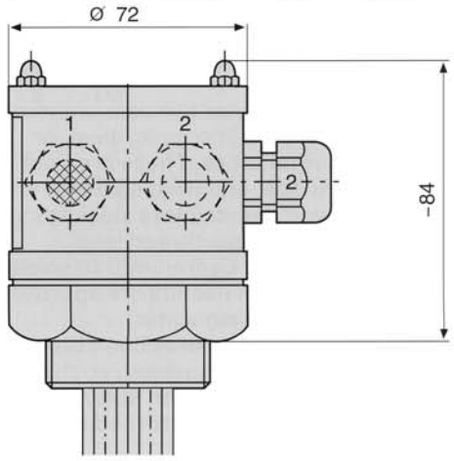

Connection cap
Models Y, EI*, and FI*
Protection class IP X6

* Temperature adjustment and reset for temperature limiter internal

1 = cable gland Pg 9
with control lamp
2 = cable gland Pg 16, 13, or 9
3 = knob for regulator

Connection cap
Models EA*, and FA*
Protection class IP X5

* Temperature adjustment external

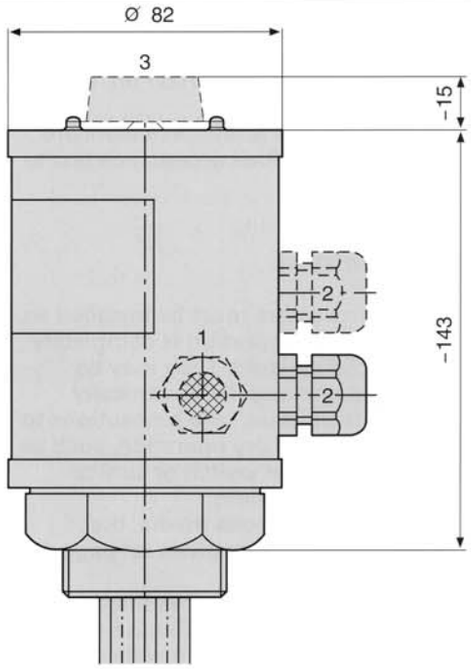

Connection cap
Models Z, and GI*
Protection class IP X6

* Temperature adjustment and reset for temperature limiter internal

1 = control lamp
2 = cable gland Pg 16, 13, or 9
3 = knob for regulator

Connection cap
Models GA*
Protection class IP X5

* Temperature adjustment external. Reset for temperature limiter internal

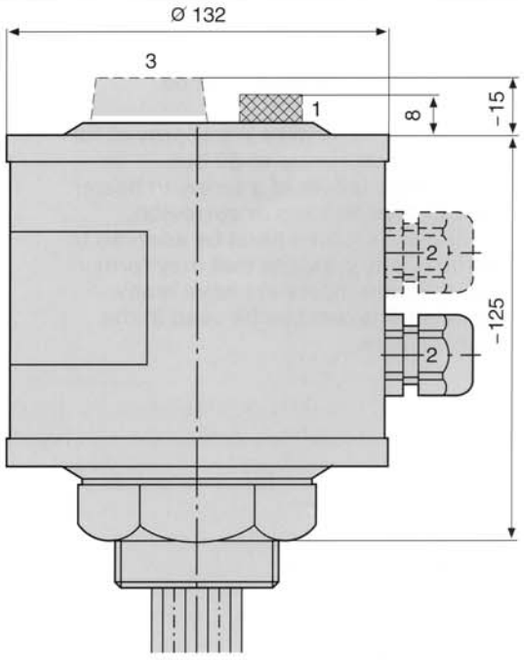

We reserve the right to make technical changes.

Immersion Heaters

Cap Model X	Cap Model V	Cap Model D – Electronic
Stainless steel connection box	Stainless steel connection box	Stainless steel connection box • With electronic temp. controller 0-100°C, single phase, max. 16 A Adjustment internal.
Electrical connections direct to M4 studs on heating elements	Electrical connections to marked connection block	Electrical connections to marked terminals
Cable glands (Ni-plated brass) with integral strain relief, size, number, and position variable	Cable glands (Ni-plated brass) with integral strain relief, size, number, and position variable	Cable glands (Ni-plated brass) with integral strain relief, size, number, and position variable
Can be combined with all screw-in heaters	Can be combined with all screw-in heaters	For combination with screw-in heaters, see table on page 11

Cap Models Y	Cap Models EI/EA	Cap Models FI/FA
Stainless steel connection box	Stainless steel connection box • With capillary tube regulator. For range and technical data, see table on page 11	Stainless steel connection box • With capillary tube regulator. For technical data, see table on page 11
Electrical connections direct to M4 studs on heating elements	Electrical connections to marked connection block	Electrical connections to marked connection block
Cable glands (Ni-plated brass) with integral strain relief, size, number, and position variable	Cable glands (Ni-plated brass) with integral strain relief, size, number, and position variable • With control lamp on request	Cable glands (Ni-plated brass) with integral strain relief, size, number, and position variable • With control lamp on request
Can be combined with all screw-in heaters	For combination with screw-in heaters, see table on page 11	For combination with screw-in heaters, see table on page 11

Cap Model Z	Cap Model GI/GA	Cap Model GA – Electronic
Stainless steel connection box	Stainless steel connection box • With capillary tube regulator/temp. limiter combination. For data, see table on page 11	Stainless steel connection box • With electronic temp. controller, digital display 0-100°C, single phase, max. 16 A, external adjustment. • Special versions with higher temp. range, for higher loads, with temp. limiter on request
Electrical connections direct to M4 studs on heating elements	Electrical connections to marked connection block	Electrical connections to marked connection block
Cable glands (Ni-plated brass) with integral strain relief, size, number, and position variable	Cable glands (Ni-plated brass) with integral strain relief, size, number, and position variable • With control lamp on request	Cable glands (Ni-plated brass) with integral strain relief, size, number, and position variable • With control lamp on request
Can be combined with all screw-in heaters	For combination with screw-in heaters, see table on page 11	Information on possible combinations with screw-in heaters on request

We reserve the right to make technical changes.

Immersion Heaters

ELTRA HILZINGER

Type EHK 403 C

Screw-In Heaters Range A:
without cap IP 00
without sensor protection tube

Screw-In Heaters Range C:
without cap IP 00
with sensor protection tube
Ø 10 x 0.5 mm

Construction
to DIN 44 922, 3 U-shaped tubular heaters, tube material C, stainless steel 1.4401, hard soldered into a brass fitting G 1 1/2 B / 60 mm A/F.

Applications
principally for heating water and water-based solutions.

Special versions
for non-standard powers, voltages, materials, and depth of immersion possible.

Accessories
- Gasket Ø 48 x 55 x 2.5 mm filled copper, Article no. **101147**
- Hexagon locknut G 1 1/2 nickel-plated brass, Article no. **100049**
- Reducer G 2B x 1 1/2, 70 mm A/F nickel-plated brass, Article no. **100759**

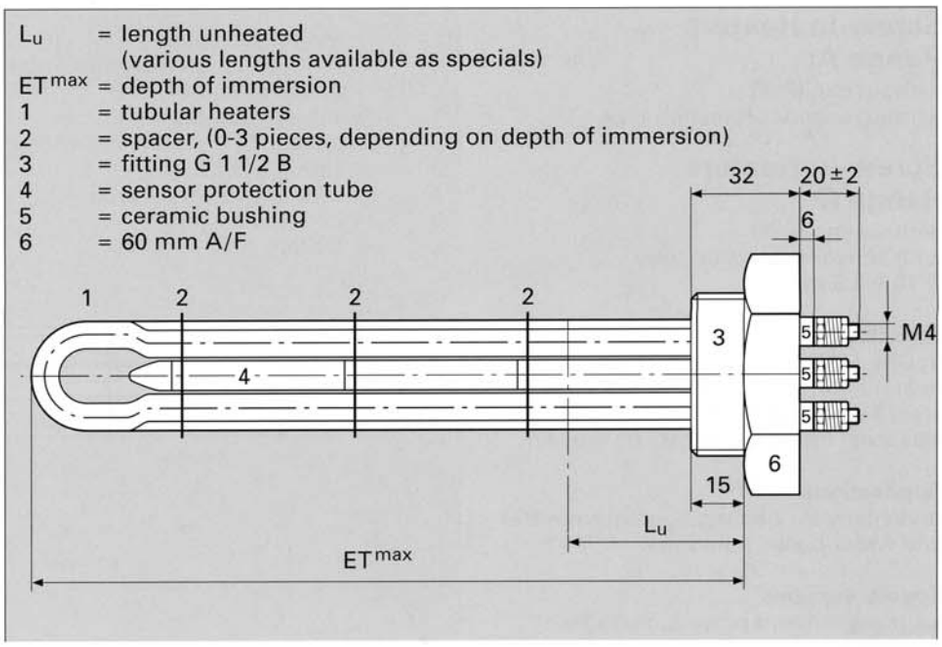

Standard types: these standard types with 230 V element voltage and star connection are normally available from stock.

Type	Power Watt	Immers.depth ET max mm	Unheated zone Lu mm	Heat flow W/cm²	Range A Art. no.	Range X (with cap) Art. no.	Range C** Art. no.
403 C 150/ 24/3	1500	240	30	~ 5	140089	140115	140102
403 C 300/ 39/3	3000	390	30	~ 5	140092	140118	140105
403 C 450/ 62/3	4500	620	30	~ 5	140095	140121	140108
403 C 600/ 80/3	6000	800	30	~ 5	140097	140123	140110
403 C 750/100/3	7500	1000	30	~ 5	140099	140125	140112
403 C 150/ 15/3	1500	150	30	~ 10	140087	140113	140100
403 C 200/ 18/3	2000	180	30	~ 10	140088	140114	140101
403 C 300/ 24/3	3000	240	30	~ 10	140090	140116	140103
403 C 450/ 34/3	4500	340	30	~ 10	140091	140117	140104
403 C 600/ 44/3	6000	440	30	~ 10	140093	140119	140106
403 C 750/ 50/3	7500	500	30	~ 10	140094	140120	140107
403 C 900/ 62/3	9000	620	30	~ 10	140096	140122	140109
403 C* 1200/ 88/3	12000	880	30	~ 10	140098	140124	140111

* Heater element 400 V, delta connection

We reserve the right to make technical changes.

** Range can be combined with caps, regulators etc., see p. 11.

Immersion Heaters

Type EHK 403 CM

Screw-In Heaters Range A:

without cap IP 00
without sensor protection tube

Screw-In Heaters Range C:

without cap IP 00
with sensor protection tube
Ø 10 x 0.5 mm

Construction
to DIN 44 922, 3 U-shaped tubular heaters, tube material CM, stainless steel 1.4529, hard soldered into a stainless steel fitting G 1 1/2 B / 60 mm A/F.

Applications
principally for heating aggressive water and water-based solutions.

Special versions
for non-standard powers, voltages, materials, and depth of immersion possible.

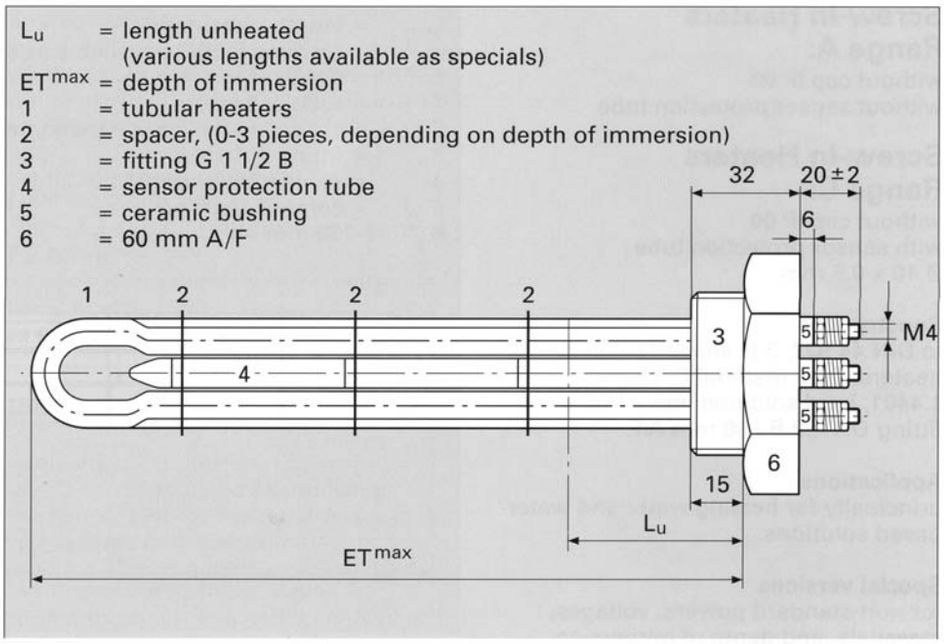

Accessories
- Gasket Ø 48 x 55 x 2.5 mm
  filled stainless steel, Article no. **104642**
- Hexagon locknut G 1 1/2
  stainless steel, Article no. **100050**
- Reducer G 2B x 1 1/2, 70 mm A/F
  nickel-plated brass, Article no. **100759**

Standard types: these standard types with 230 V element voltage and star connection are normally available from stock.

Type	Power Watt	Immers.depth ET max mm	Unheated zone Lu mm	Heat flow W/cm²	Range A Art. no.	Range X (with cap) Art. no.	Range C** Art. no.
403 CM 150/15/3	1500	150	30	~ 10	140063	140079	140071
403 CM 200/18/3	2000	180	30	~ 10	140064	140080	140072
403 CM 300/24/3	3000	240	30	~ 10	140065	140081	140073
403 CM 450/34/3	4500	340	30	~ 10	140066	140082	140074
403 CM 600/44/3	6000	440	30	~ 10	140067	140083	140075
403 CM 750/50/3	7500	500	30	~ 10	140068	140084	140076
403 CM 900/62/3	9000	620	30	~ 10	140069	140085	140077
403 CM* 1200/88/3	12000	880	30	~ 10	140070	140086	140078

* Heater element 400 V, delta connection

We reserve the right to make technical changes.

** Range can be combined with caps, regulators etc., see p. 11.

Immersion Heaters

ELTRA HILZINGER

Type EHK 403 S

Screw-In Heaters Range A:
without cap IP 00
without sensor protection tube

Screw-In Heaters Range C:
without cap IP 00
with sensor protection tube
Ø 10 x 0.5 mm

Construction
to DIN 44 922, 3 U-shaped tubular heaters, tube material S, steel 1.0034, hard soldered into a steel fitting G 1 1/2 B / 60 mm A/F

Applications
principally for heating air up to a tube surface temperature of 420°C, or for heating oil, alkaline solutions, and other liquid media that do not attack steel.

Special versions
for non-standard powers, voltages, materials, and depth of immersion possible.

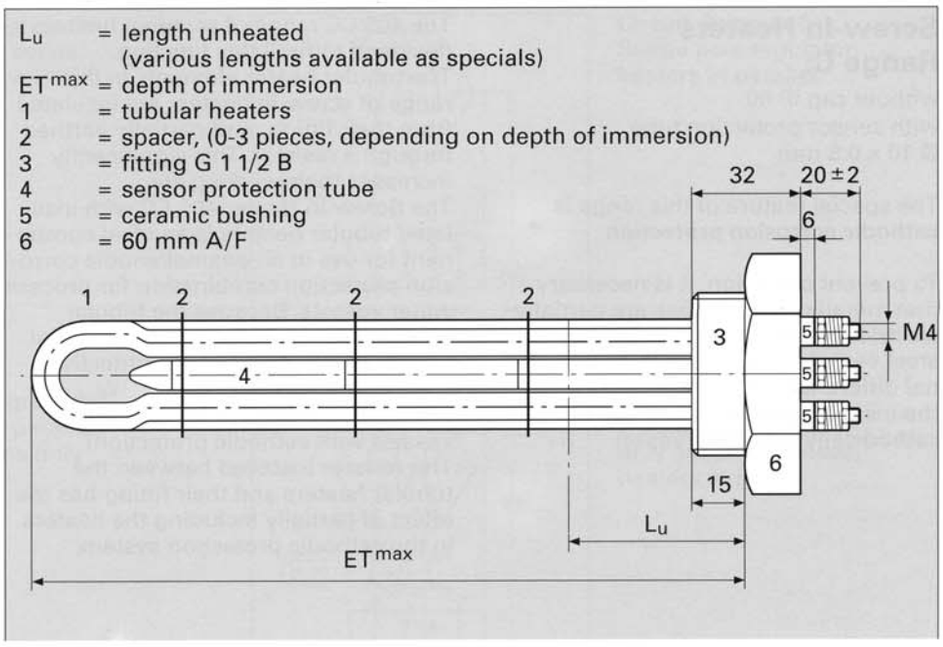

Accessories
- Gasket Ø 48 x 55 x 2.5 mm filled steel, Article no. **103604**
- Hexagon locknut G 1 1/2 steel (zinc-plated), Article no. **100048**
- Reducer G 2B x 1 1/2, 70 mm A/F steel (untreated), Article no. **100487**

Standard types: these standard types with 230 V element voltage and star connection are normally available from stock.

Type	Power Watt	Immers.depth ET max mm	Unheated zone Lu mm	Heat flow W/cm²	Range A Art. no.	Range X (with cap) Art. no.	Range C** Art. no.
403 S 45/ 31/3	450	310	30	~ 1	140000	140042	140021
403 S 75/ 50/3	750	500	30	~ 1	140001	140043	140022
403 S 150/100/3	1500	1000	30	~ 1	140002	140044	140023
403 S 105/ 31/3	1050	310	30	~ 2	140003	140045	140024
403 S 120/ 39/3	1200	390	30	~ 2	140004	140046	140025
403 S 150/ 50/3	1500	500	30	~ 2	140005	140047	140026
403 S 210/ 62/3	2100	620	30	~ 2	140006	140048	140027
403 S 240/ 75/3	2400	750	30	~ 2	140007	140049	140028
403 S 300/100/3	3000	1000	30	~ 2	140008	140050	140029
403 S 150/ 27/3	1500	270	30	~ 4	140009	140051	140030
403 S 210/ 39/3	2100	390	30	~ 4	140010	140052	140031
403 S 300/ 50/3	3000	500	30	~ 4	140011	140053	140032
403 S 450/ 75/3	4500	750	30	~ 4	140012	140054	140033
403 S 600/100/3	6000	1000	30	~ 4	140013	140055	140034
403 S 750/119/3	7500	1190	30	~ 4	140014	140056	140035
403 S 190/ 24/3	1900	240	30	~ 6,5	140015	140057	140036
403 S 300/ 31/3	3000	310	30	~ 6,5	140016	140058	140037
403 S 450/ 50/3	4500	500	30	~ 6,5	140017	140059	140038
403 S 600/ 62/3	6000	620	30	~ 6,5	140018	140060	140039
403 S 750/ 80/3	7500	800	30	~ 6,5	140019	140061	140040
403 S 900/100/3	9000	1000	30	~ 6,5	140020	140062	140041

We reserve the right to make technical changes.

** Range can be combined with caps, regulators etc., see p. 11.

Immersion Heaters

Type EHK 405 CC

Screw-In Heaters Range C:

without cap IP 00
with sensor protection tube
Ø 10 x 0.5 mm

The special feature of this range is **cathodic corrosion protection**

To prevent corrosion, it is necessary that metallic heater tubes are partially electrically separated from enamelled steel vessels. To achieve this, a potential difference is maintained between the insulated heater tubes and the cathodically protected vessel.

The 405 CC range of screw-in heaters is designed to fulfil this function.
The tubular heater elements in this range of screw-in heaters are insulated from their fitting, and partially earthed through a resistor. This significantly increases their working life.
The Screw-In Heater 405 CC with insulated tubular heaters is an ideal component for use in an enamel/anodic corrosion protection combination for process water vessels. Because the tubular heaters are not at the wrong potential, the life of the magnesium protective anodes is increased (see DVGW Instruction Sheet 511 for enamelled vessels with cathodic protection).
The resistor installed between the tubular heaters and their fitting has the effect of partially including the heaters in the cathodic protection system.

Construction
to DIN 44 922, 3 U-shaped tubular heaters, tube material CC, chrome-nickel alloy 2.4858/Incoloy 825, inserted pressure-tight and insulated (with seals) into a brass fitting G 1 1/2 B / 60 mm A/F.

Applications
principally for heating process water in enamelled or coated vessels with protective anodes, e.g. for hot water tanks, boilers, heat pumps.

Special versions
for non-standard powers, voltages, materials, and depth of immersion possible.

Accessories
- Gasket Ø 48 x 55 x 2.5 mm filled copper, Article no. **101147**
- Reducer G 2B x 1 1/2, 70 mm A/F nickel-plated brass, Article no. **100759**

Standard types: these standard types with 230 V element voltage and star connection are normally available from stock.

Type	Power Watt	Immers.depth ET max mm	Unheated zone Lu mm	Heat flow W/cm²	Range X (with cap) Art. no.	Range C Art. no.	This range can be combined with Cap GI Art. no. 132156 or Cap GA Art. no. 132160
405 CC 200/32/12	2000	320	120	~ 8	140126	140132	
405 CC 300/39/12	3000	390	120	~ 8	140127	140133	
405 CC 450/50/12	4500	500	120	~ 8	140128	140134	
405 CC 600/62/12	6000	620	120	~ 8	140129	140135	
405 CC 750/72/12	7500	720	120	~ 8	140130	140136	
405 CC 900/85/12	9000	850	120	~ 8	140131	140137	

Customer-specific variant with Cap GA

Construction:	CrNi painted yellow RAL 1032/black
Protection class:	IP 43
Temp. controller:	range + 5 °C to + 80 °C
Frost protect. setting:	+ 7 °C
Temp. limiter:	cut out temp. max. + 100 °C
Operating pressure:	max. 10 bar

This Screw-In Heater Type 405 CC with Cap GA was developed in cooperation with Schaefer-Heiztechnik GmbH for retro-fitting in the DOMOCELL ® storage unit.
This screw-in heater consists of either 1 or 3 U-shaped tubular heaters, inserted pressure-tight and insulated in a brass fitting with G 1 1/2 B thread.

A 3-phase temperature controller and a temperature limiter are installed in the cap. The controller has external adjustment, and a frost protection setting.

Type	Power Watt	Immers.depth ET max mm	Unheated zone Lu mm	Voltage V	DOMOCELL ® storage unit volume Litre	Article no.
405 CC 250/ 70/30 GA	2500	700	300	1/N/PE AC 230 V	125/160	106928
405 CC 300/110/61 GA	3000	1100	610	*3/N/PE AC 400 V	200/250/300/500	106931
405 CC 600/110/50 GA	6000	1100	500	3/N/PE AC 400 V	200/250/300/500	106930
405 CC 750/150/61 GA	7500	1500	610	3/N/PE AC 400 V	400/500	106929

Installation instructions for the electrician
Take care that the earth connection is properly made. The feed and outlet of the tank must be included in the protective measures. The tubular heaters of the Screw-In Heater 405 CC must not be included in the protective measures.
The fitting must be electrically in contact with the tank. Do not try to seal it with PTFE tape or hemp, use the recommended copper gasket (Art. no. 101147).

We reserve the right to make technical changes.
* can be re-wired to: 1/N/PE AC 230 V

Immersion Heaters

ELTRA HILZINGER

Connection diagrams

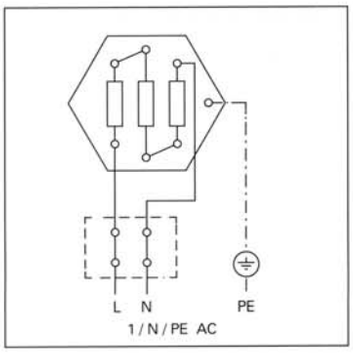

Circuit diagram 1
Heaters in series, connections only in cap

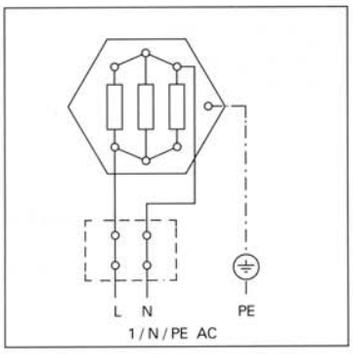

Circuit diagram 2
Heaters in parallel, connections only in cap

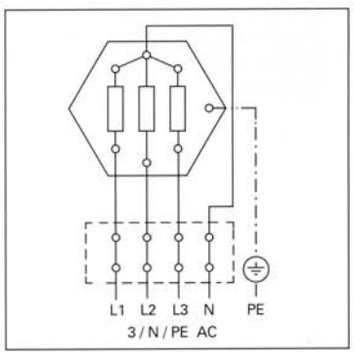

Circuit diagram 3
Heaters star connected, connections only in cap

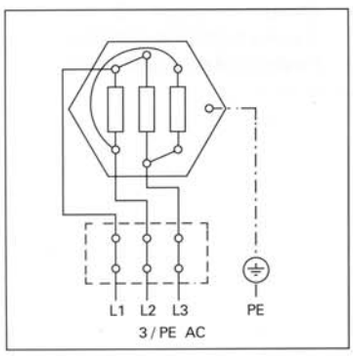

Circuit diagram 4
Heaters delta connected, connections only in cap

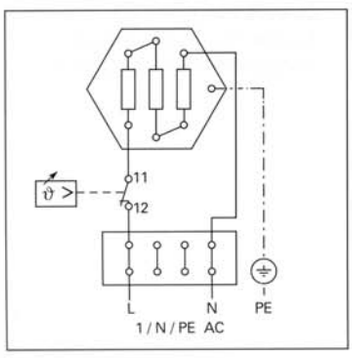

Circuit diagram 5
Single phase regulator, heaters in series

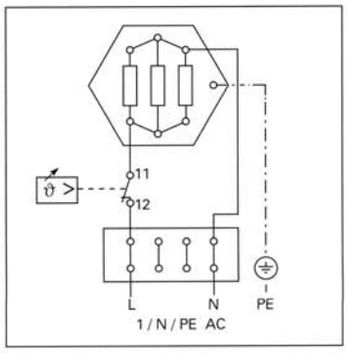

Circuit diagram 6
Single pole regulator, heaters in parallel

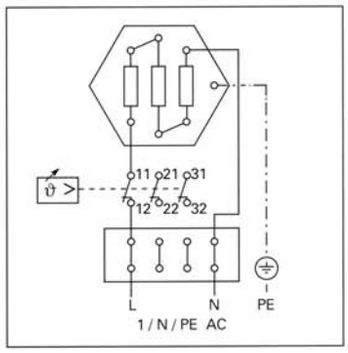

Circuit diagram 7
3-pole regulator, only single pole used, heaters in series

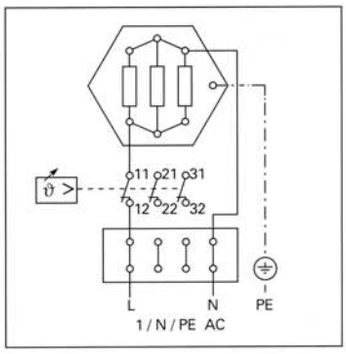

Circuit diagram 8
3-pole regulator, only single pole used, heaters in parallel

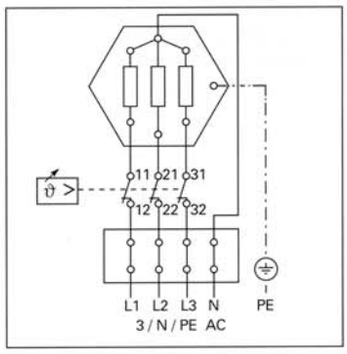

Circuit diagram 9
3-pole regulator, heaters star connected

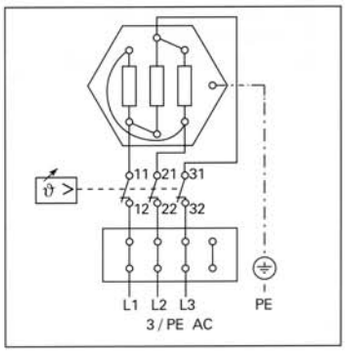

Circuit diagram 10
3-pole regulator, heaters delta connected

Immersion Heaters

Connection diagrams

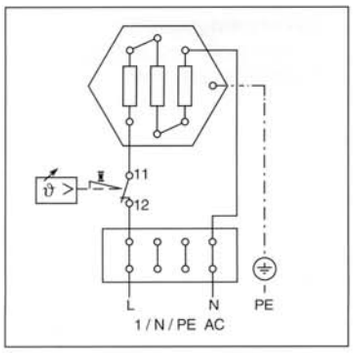

Circuit diagram 11
Single pole limiter,
heaters in series

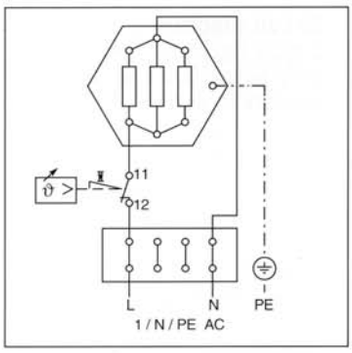

Circuit diagram 12
Single pole limiter,
heaters in parallel

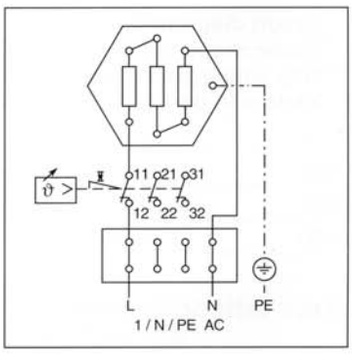

Circuit diagram 13
3-pole limiter,
single pole used,
heaters in series

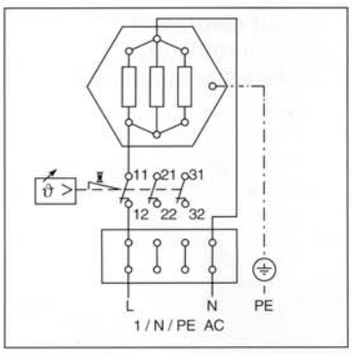

Circuit diagram 14
3-pole limiter,
single pole used,
heaters in parallel

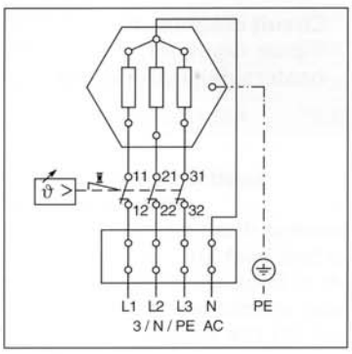

Circuit diagram 15
3-pole limiter,
heaters star connected

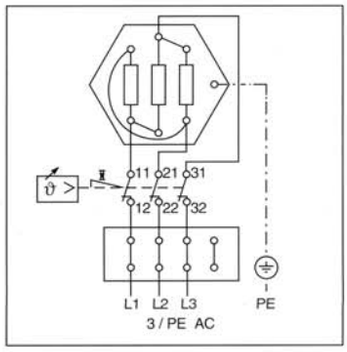

Circuit diagram 16
3-pole limiter,
heaters delta connected

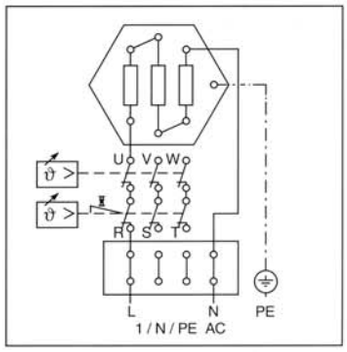

Circuit diagram 17
3-pole regulator/limiter,
single pole used,
heaters in series

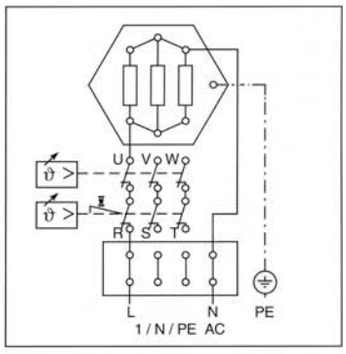

Circuit diagram 18
3-pole regulator/limiter,
single pole used,
heaters in parallel

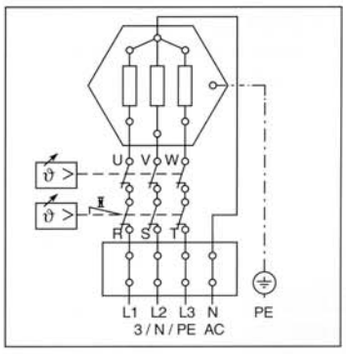

Circuit diagram 19
3-pole regulator/limiter,
heaters star connected

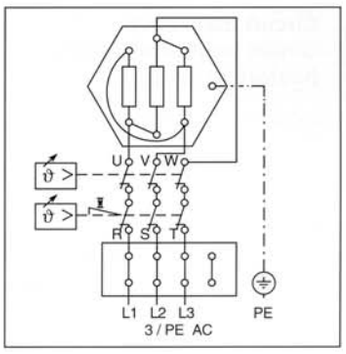

Circuit diagram 20
3-pole regulator/limiter,
heaters delta connected

Heater tube materials

For screw-in heaters, the following materials are used for the heater tubes:

Copper (K) Material no. 2.0090.32
For heating water and watery alkali solutions that do not attack copper.
Applications: hot water equipment, washing machines, sterilisers etc.

Steel (S) Material no. 1.0034
For heating air, oil, alkaline baths.
Surface temperature max. 420°C (formation of scale above this temp).
Applications: air heaters, heat exchangers, oil baths, drying ovens etc.

Stainless steel (V) Material no. 1.4306
These heater tubes can be used in air at surface temperatures up to 750°C. (formation of scale above this temp.).
Its corrosion resistance makes this material very suitable for water heating.
Applications: radiation heaters, air and gas heaters, liquid heating, thawing heaters, washing machines, melting metals etc.

Stainless steel (C) Material no. 1.4401
This molybdenum alloyed stainless steel is especially suitable for heating aggressive water, watery solutions etc.
Applications: dish washers, washing machines etc.

Chrome-nickel alloy (CC) Material no. 2.4858
This material is particularly suitable for heating aggressive water.
Applications: boilers and hot water equipment.

Stainless steel (CN) Material no. 1.4876
This material is suitable for use in air and with liquids. It is used where the heater tubes have to withstand thermal shock conditions.
Applications: washer/dryer combinations, steam generators.

Stainless steel (CM) Material no. 1.4529
This material is also especially suitable for heating aggressive water.
Applications: sterilisers.

Stainless steel (N) Material no. 1.4828
This material is very resistant to high temperatures, and suitable for surface temperatures between 700 and 850°C.
Applications: air heaters, drying ovens.

Monel (L) Material no. 2.4360
Heaters with tubes made of this material are used mainly for heating aggressive liquids.
Applications: watery alkali and acid solutions, developing baths.

Fitting materials

Steel (S) St 37
Suitable for use with oils, fats, water-based solutions, and air.

Brass (Ms) Ms 58
Suitable for use with water, water-based solutions, and air.

Stainless steel (V) Material no. 1.4301
Suitable for use aggressive media and air.

Surface treatments for heater tubes

Heater elements with nickel-plated copper tubes
Nickel-plating copper heater element tubes increases their corrosion resistance.

Heater elements with steel tubes (S)
After manufacturing, the surface of heater elements with steel tubes is untreated steel.
To achieve some limited corrosion resistance for transport and storage, they are coated with protective oil.

Heater elements with stainless steel and nickel alloy tubes (V, C, CC, CN, L, NN, CM)
These tubes are heat treated to achieve an austenitic structure. This process can produce two different colours on their surface:
a dark colour for radiation purposes, or, for heating liquids, a lighter colour produced by heat treating under a gas shield.

Immersion Heaters

Technical data

Loading:

General comments
The selection of the tube material for screw-in heaters, and determining the length of the heated zone depends on the specific heat flow and the details of the application. The most suitable fitting material must also be chosen in the light of the above factors.
The Application Table shows the specific heat flows that current technology makes possible. Diagrams 1 and 2 provide information for air heating applications. Further information is provided in DIN 44 875 „Metallic tubular electric heaters – Guidelines for installation and application".

Determining the heat flow
The following formula can be used to obtain the approximate heat flow from a 3-tube heater:

$$p = \frac{P}{6 \cdot (ET - L_u) \cdot s}$$

p = specific heat flow in W/cm²
P = nominal power in W
ET = depth of immersion
L_u = length of unheated zone
s = circumference of heater tube in cm (= 2.67 cm for 8.5 mm tube dia.)
$ET - L_u$ = length of heated zone of screw-in heater

After finding the specific heat flow from the Application Table or Diagrams 1 and 2, the formula

$$(ET - L_u) = \frac{P}{6 \cdot p \cdot s}$$

can be used to determine the length of heated zone required.

The heat flows and associated materials given in the Application Table are guidelines. Specific material recommendations can only be made when precise details of the application are known. The Application Table covers only a few of the possibilities. Please contact us if you need assistance, we will be pleased to help.

Tube surface temperature as a function of specific heat flow and speed of air

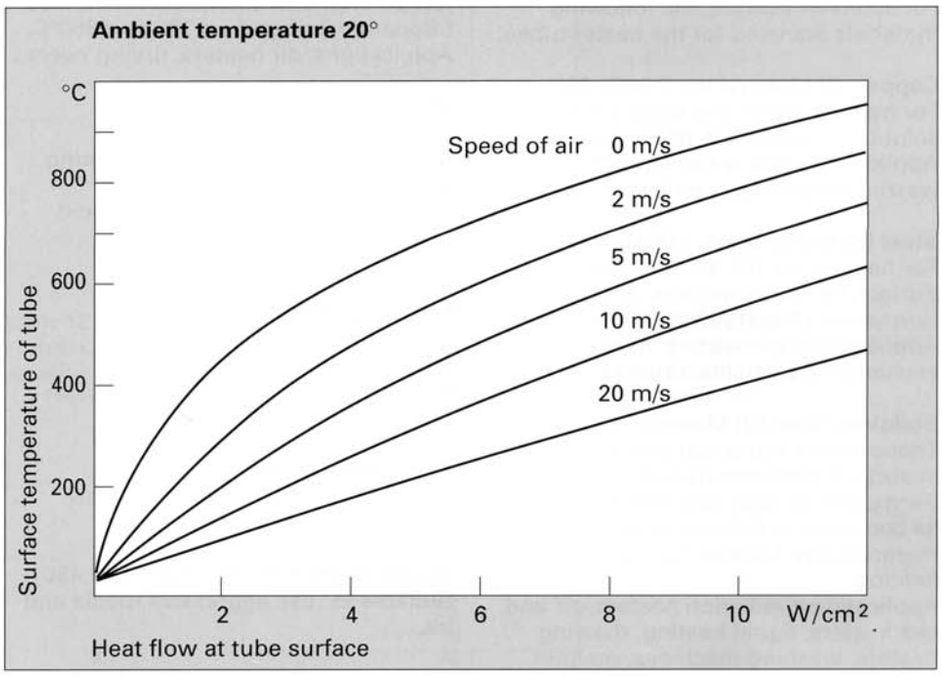

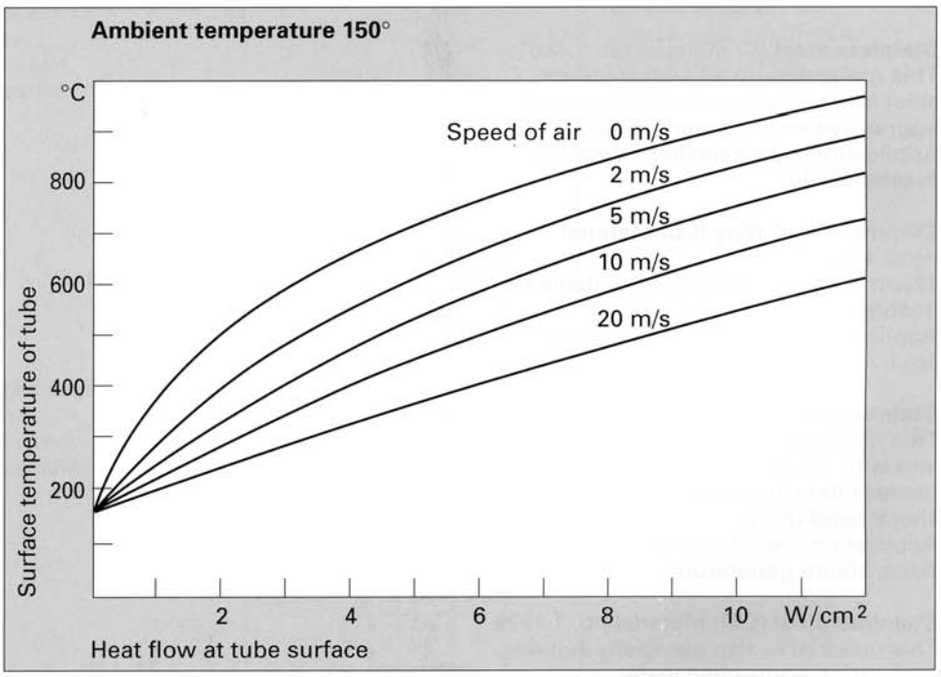

For round tube heaters operating horizontally in air.
Tube diameter 8.5 mm
Emissivity factor 79 (dark tube surface)
Air pressure 1 bar
Air flow at 90° to heater tubes

Diagrams 1 and 2 are not intended for designing axial flow air heaters.
The curves are based on measurements made on a single freely radiating heater tube, and take no account of the influence of neighbouring heater tubes.

Immersion Heaters

ELTRA HILZINGER

Technical data

Determining the power requirement
The power required to raise the temperature of a mass (m) of fluid with a known specific heat capacity (cp), through Δt°C in 1 hour is given, as a first approximation, by the formula:

$$P = \frac{m \cdot c_p \cdot \Delta t}{3600}$$

This formula takes no account of heat losses due to addition of fluid, evaporation, radiation, convection etc. The specific heat capacity is given in tables of physical properties.

Examples: water cp ~ 4.2
air cp ~ 1.0
oil cp ~ 2.0

Footnote: the formulae given are only suitable for finding approximate values – they are not suitable for precise mathematical calculations.

Application table

Application	p W/cm²	Tube material								
		K	S	V	C	CN	N	CC	CM	L
Water (still)	10	●		●	●	●		●	●	●
Water (stirred)	13	●		●	●	●		●	●	●
Washing liquors	1	●		●	●	●		●	●	●
Water (with danger of heater running dry)	6			●	●	●		●	●	●
Alkaline baths	6		●							
Watery acid solutions	2.5				●	●		●	●	●
Phosphating baths	4			●	●	●		●	●	●
Glycerine	2.3			●	●					
Diphyl	2		●							
Thin oil, up to 50°C	4		●							
Thin oil, up to 100°C	2.5		●							
Thin oil, up to 250°C	2		●							
Thin oil, up to 350°C	1.5		●							
Spooling oil	4		●							
Frying oil	5.5		●	●						
Tar	1		●	●						
Lead bath	4			●						
Gases		Specific heat flow								
Still air, amb. temp. 20°C			1.4	5	5	6	6	6		
Still air, amb. temp. 150°C			1.2	4.5	4.5	5.5	5.5	5.5		
Still air, amb. temp. 250°C			0.8	4	4	5	5	5		
Still air, amb. temp. 350°C				3.5	3.5	4.5	4.5	4.5		
Movin air, s. Diagrams 1+2										

7*	8*	9*	10	11*	12*	13*	14	15*
EA	FA	FI	Y	GI	GA	GA	Z	D
Regulator	Limiter	Limiter		Reg./Lim.	Reg./Lim.	Reg./Lim.		El. contr.
0 - 95 °C	0 - 300 °C	120 °C		80/100 °C	95/110 °C	80/100 °C		0 - 100 °C
1	1	3		3	3	3		1
16 A	16 A	3 x 25 A		3 x 20 A	3 x 20 A	3 x 20 A		16 A
PG 16	PG 16/9	PG 16	PG 16	PG 16	PG 16	PG 16	PG 16	PG 16
external	external	internal		internal	external	external		internal
131815	131813	131811	131809	131831	131828	131826		

*VDE Approval Mark applied for

			●				●	
●	●	●	●	●	●	●	●	●
			●				●	
●	●	●	●	●	●	●	●	●
			●				●	
●	●	●	●	●	●	●	●	●
			●				●	
●	●	●	●	●	●	●	●	●
			●				●	
		●	●	●	●	●	●	
			●				●	
●	●	●	●	●	●	●	●	●
			●				●	
		●	●	●	●	●	●

7*	8*	9*	10	11*	12*	13*	14	15*
EA	FA	FI	Y	GI	GA	GA	Z	D
Regulator	Limiter	Limiter		Reg./Lim.	Reg./Lim.	Reg./Lim.		El. contr.
0 - 95 °C	0 - 300 °C	120 °C		80/100 °C	95/110 °C	80/100 °C		0 - 100 °C
1	1	3		3	3	3		1
16 A	16 A	3 x 25 A		3 x 20 A	3 x 20 A	3 x 20 A		16 A
PG 16	PG 16/9	PG 16	PG 16	PG 16	PG 16	PG 16	PG 16	PG 16
external	external	internal		internal	external	external		internal
131815	131813	131811	131809	131831	131828	131826		

for

*VDE Approval Mark applied for

			●				●	
●	●	●	●	●	●	●	●	●
			●				●	
●	●	●	●	●	●	●	●	●
			●				●	
●	●	●	●	●	●	●	●	●
			●				●	
●	●	●	●	●	●	●	●	●
			●				●	
		●	●	●	●	●	●	
			●				●	
●	●	●	●	●	●	●	●	●
			●				●	
		●	●	●	●	●	●	
			●				●	
		●	●	●	●	●	●	
			●				●	
		●	●	●	●	●	●	
			●				●	
		●	●	●	●	●	●	
			●				●	
		●	●	●	●	●	●	
			●				●	
		●	●	●	●	●	●	
			●				●	
		●	●	●	●	●	●	
			●				●	
		●	●	●	●	●	●	
			●				●	
		●	●	●	●	●	●	
			●				●	
		●	●	●	●	●	●	
			●				●	
		●	●	●	●	●	●	
			●				●	
●	●	●	●	●	●	●	●	●
			●				●	
●	●	●	●	●	●	●	●	●
			●				●	
●	●	●	●	●	●	●	●	●
			●				●	
●	●	●	●	●	●	●	●	●
			●				●	
●	●	●	●	●	●	●	●	●
			●				●	
●	●	●	●	●	●	●	●	●
			●				●	
●	●	●	●	●	●	●	●	●
			●				●	
●	●	●	●	●	●	●	●	●
			●				●	
●	●	●	●	●	●	●	●	●
			●				●	
●	●	●	●	●	●	●	●	●
			●				●	
●	●	●	●	●	●	●	●	●
			●				●	
●	●	●	●	●	●	●	●	●
			●				●	
		●	●	●	●	●	●	
			●				●	
		●	●	●	●	●	●	
			●				●	
		●	●	●	●	●	●	
			●				●	
●	●	●	●	●	●	●	●	●
			●				●	
●	●	●	●	●	●	●	●	●
			●				●	
		●	●	●	●	●	●	
			●				●	
		●	●	●	●	●	●	
			●				●	
		●	●	●	●	●	●	
			●				●	
		●	●	●	●	●	●	

Zoppas Industries

RICA

Via Podgora 26
I-31029 Vittorio Veneto (TV)
Tel: +39 0438/910-1 - Fax: +39 0438/912236 - 912272
http:// www.rica.zoppas-industries.it
E-mail: rica@zoppas-industries.it

RICA FRANCE

Zone d'activité de la Croix St. Marc
12, Rue Jacques Anquetil
F-93600 Aulnay sous Bois
Tel: +33 1/48686473 - Fax: +33 1/48799847
E-mail: rica_fr@zoppas-industries.it

irca UK
Industrial Division
Unit 11 & 12 - Tafarnaubach - Ind. Estate
UK-Tredegar, Gwent, South Wales, NP2 3AA
Tel: +44 1495/725555 - Fax: +44 1495/725544
E-mail: irca_uk@zoppas-industries.it

Still-man
Heating products Inc.
1011 Volunteer Drive
U.S.A.-Cookeville TN 38503
Tel: +1 931/5263351 - Fax: +1 931/5281368
E-mail: still-man@zoppas-industries.it

ELTERM

Rua Cícero Borges de Morais, 584
06407-900 - Barueri - SP - Brazil
Tel: +55 11/72983370 - Fax: +55 11/72984210
E-mail: elterm@elterm.com.br

ELTRA

ELTRA Heizelemente GmbH
Robert-Bosch-Straße 18 - D-64319 Pfungstadt
Phone: +49 +61 57/80 08-0 - Fax: +49 +61 57/8 56 45
Internet:http://www.eltra.de - e-mail: eltra@zoppas-industries.it

03/2000 - 500