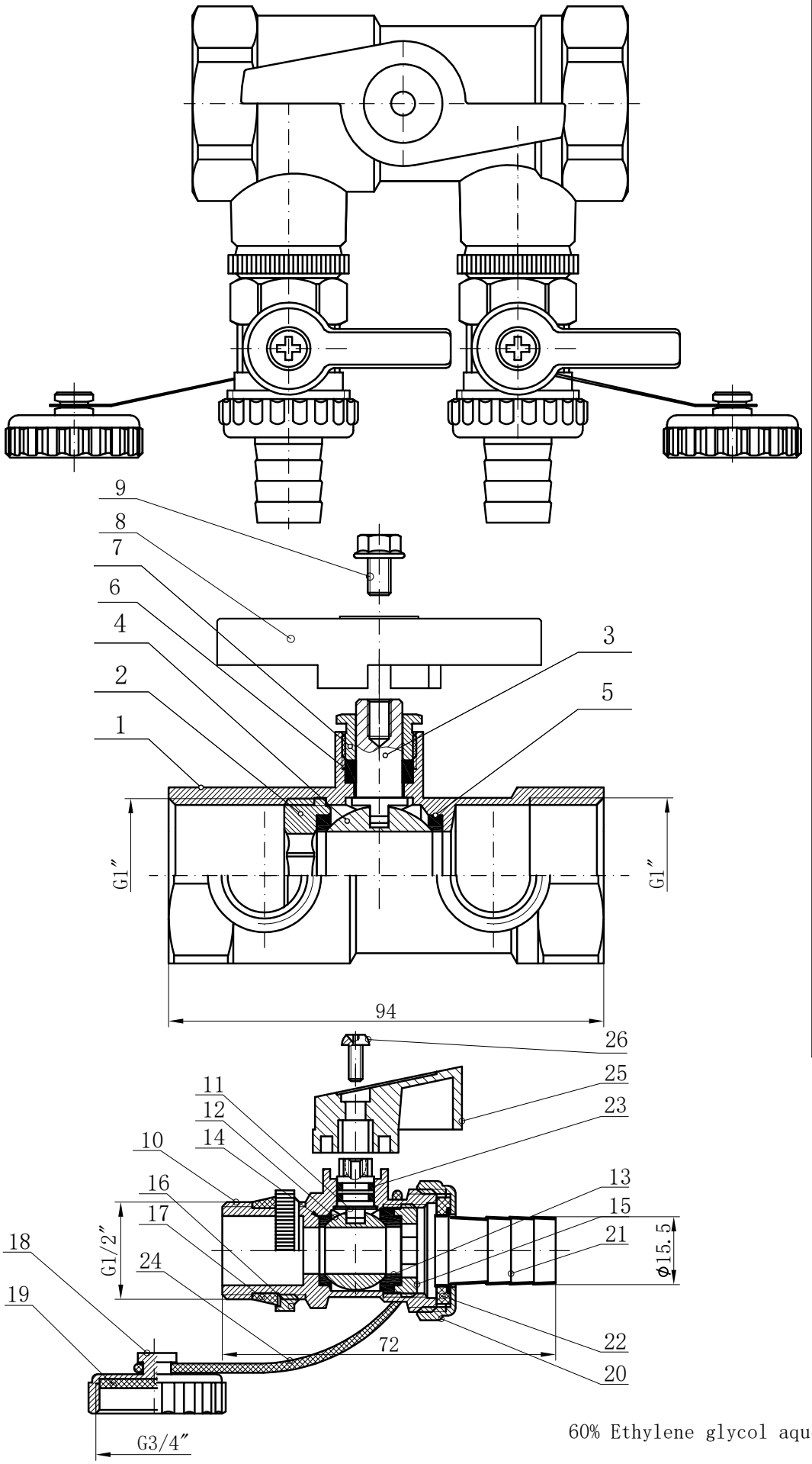

NO.	Part name	Material
1	Body	Brass
2	Bonnet	Brass
3	Stem	Brass
4	Ball	Brass
5	PTFE seat	PTFE(130℃)
6	Packing gland	PTFE
7	Packing nut	Brass
8	Handle	Aluminum
9	Screw	Steel
10	Body	Brass
11	Stem	Brass
12	Ball	Brass
13	PTFE seat	PTFE(130℃)
14	PTFE seat	PTFE(130℃)
15	Locking nut	Brass
16	Ring	Brass
17	Disk	EPDM
18	Plug	Brass
19	Gasket	EPDM
20	Nut	Brass
21	Outlet	Brass
22	Gasket	EPDM
23	O-ring	EPDM
24	Rope	Plastic
25	Handle	Aluminum
26	Screw	Steel

60% Ethylene glycol aqueous solution

	Code	516007160
	Description	