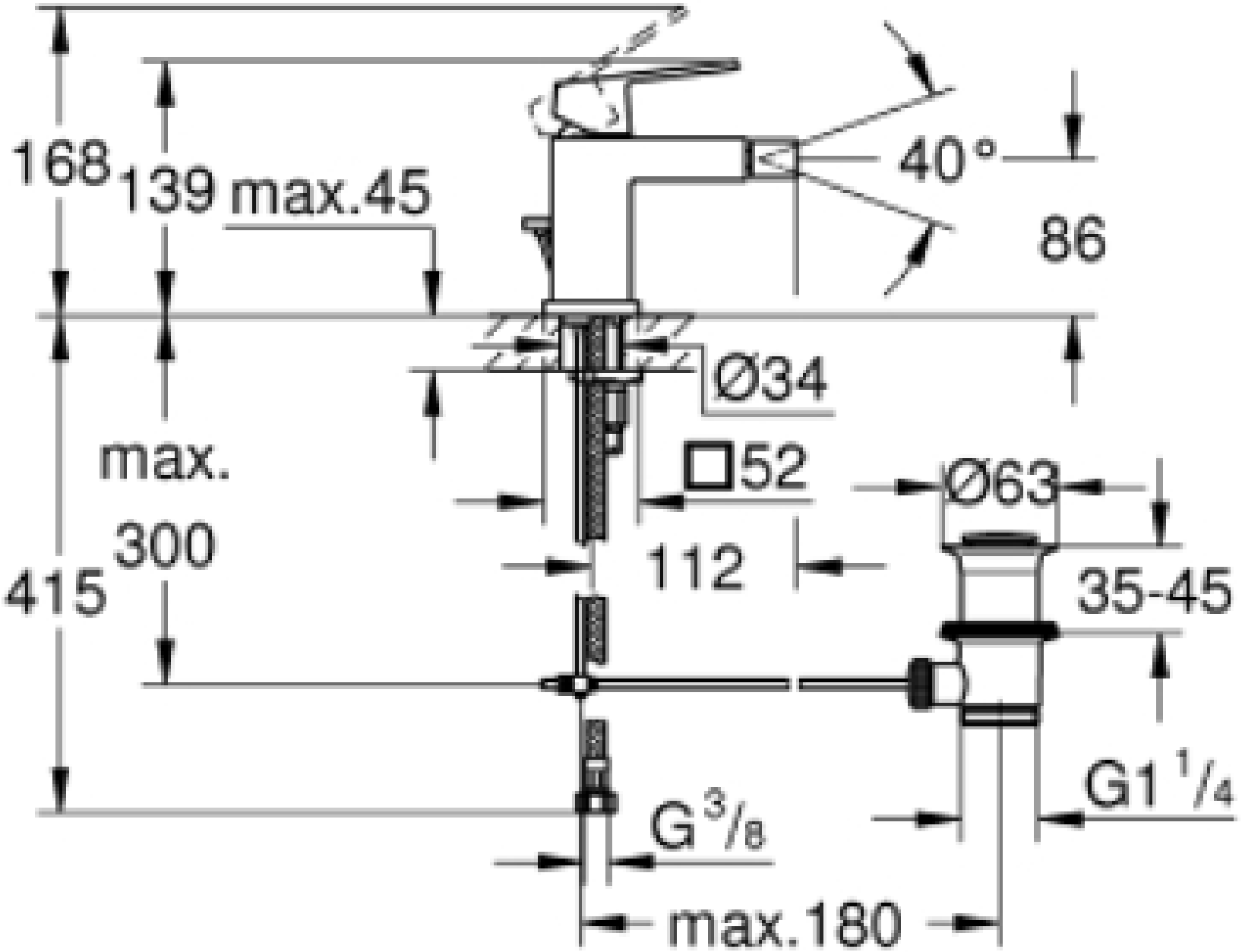
168
139
max.45
40°
86
Ø34
max.
300
415
□52
Ø63
112
35-45
G1 1/4
G 3/8
max.180

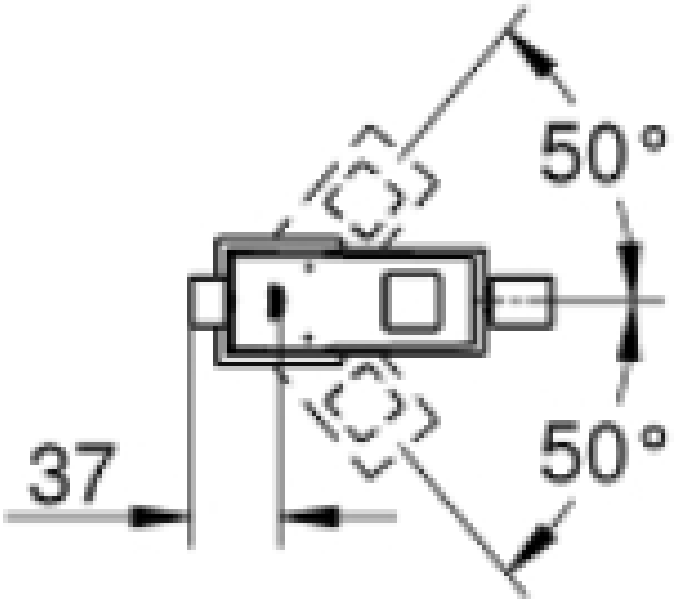
50°
50°
37