CODE	CAPACITY (litres)	ØD (mm)	H (mm)	E (mm)	ØC	P MAX (bar)	PRECHARGE ±20% (bar)	System temperature	Membrane temperature
13020004**	4	225	195	-	3/4"G	5	1,5	-10÷+110°C	-10÷+70°C
13020008**	8	220	295	-	3/4"G	5	1,5	-10÷+110°C	-10÷+70°C
13020012**	12	294	281	-	3/4"G	4	1,5	-10÷+110°C	-10÷+70°C
13020018**	18	290	375	-	3/4"G	4	1,5	-10÷+110°C	-10÷+70°C
13020024**	25	324	415	-	3/4"G	4	1,5	-10÷+110°C	-10÷+70°C
13020035**	35 W.F.	404	387	119	3/4"G	4	1,5	-10÷+110°C	-10÷+70°C
13020050**	50 W.F.	407	507	157	3/4"G	4	1,5	-10÷+110°C	-10÷+70°C
13020080**	80	450	608	150	1"G	6	2,5	-10÷+110°C	-10÷+70°C
13020105**	105	500	665	165	1"G	6	2,5	-10÷+110°C	-10÷+70°C
13020150**	150	500	897	216	1"G	6	2,5	-10÷+110°C	-10÷+70°C
13020200**	200	600	812	225	1"G	6	2,5	-10÷+110°C	-10÷+70°C
13020250**	250	630	957	245	1"G	6	2,5	-10÷+110°C	-10÷+70°C
13020300**	300	630	1105	245	1"G	6	2,5	-10÷+110°C	-10÷+70°C
13020400**	400	630	1450	245	1"G	6	2,5	-10÷+110°C	-10÷+70°C
13020500**	500	750	1340	290	1"G	6	2,5	-10÷+110°C	-10÷+70°C
13020600**	600	750	1460	290	1"G	6	2,5	-10÷+110°C	-10÷+70°C
13020700**	700	750	1755	290	1"G	6	2,5	-10÷+110°C	-10÷+70°C
13020800**	800	750	1855	290	1"G	6	2,5	-10÷+110°C	-10÷+70°C
13020900**	900	750	2105	290	1"G	6	2,5	-10÷+110°C	-10÷+70°C

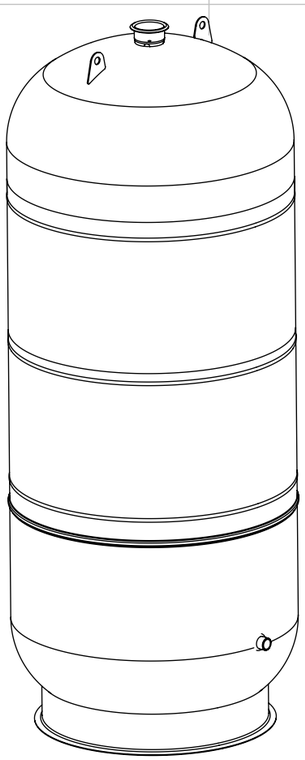

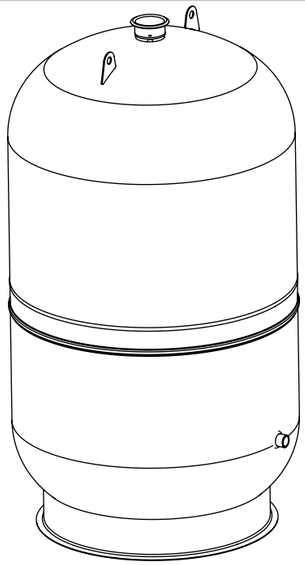

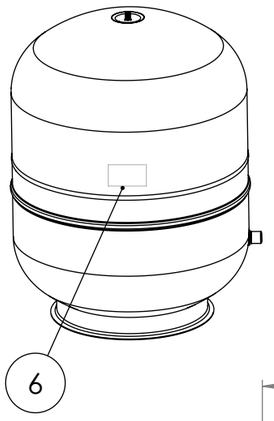

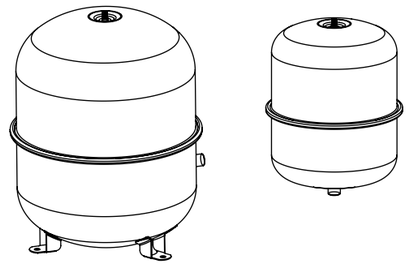

400-600-700-800-900 (L)

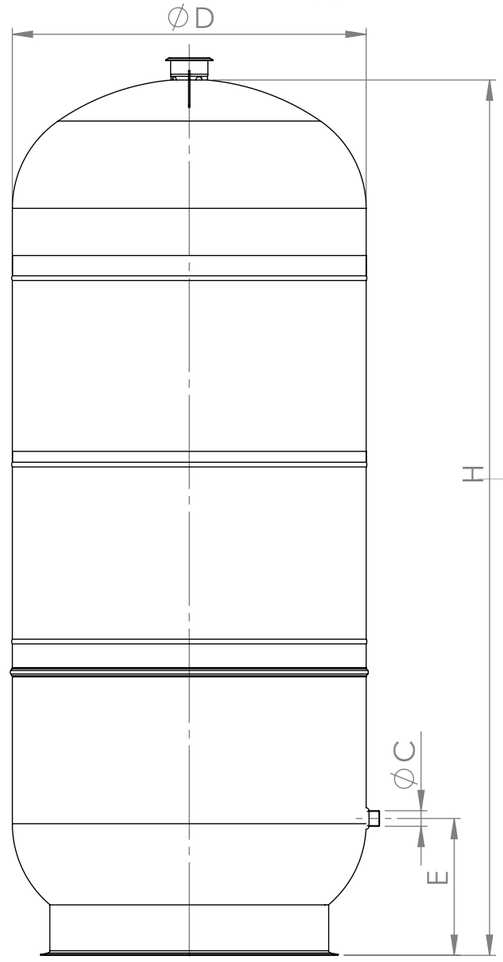

500 (L)

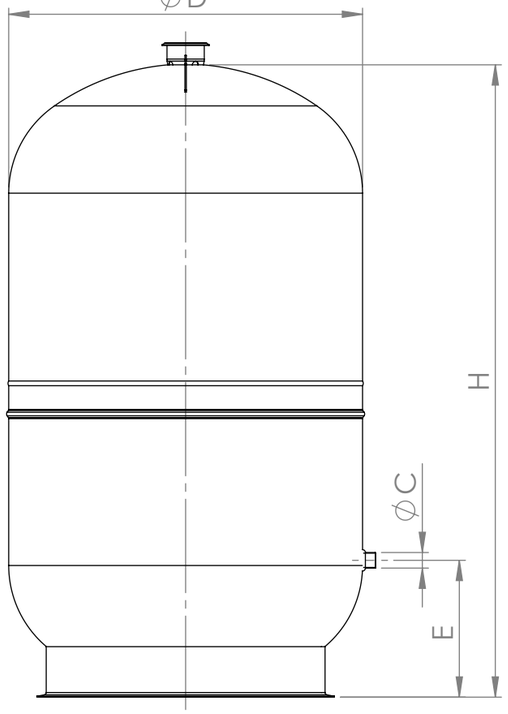

8-12-18-25 (L)

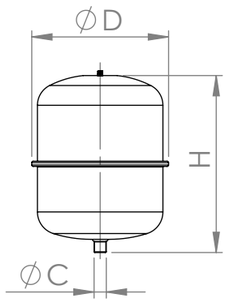

35W.F.-50W.F. (L)

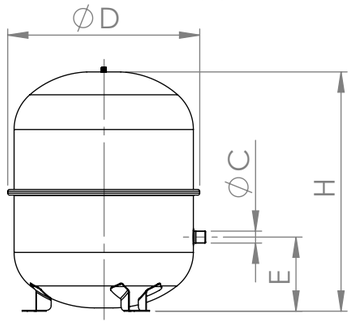

80-105-150-200-250-300 (L)

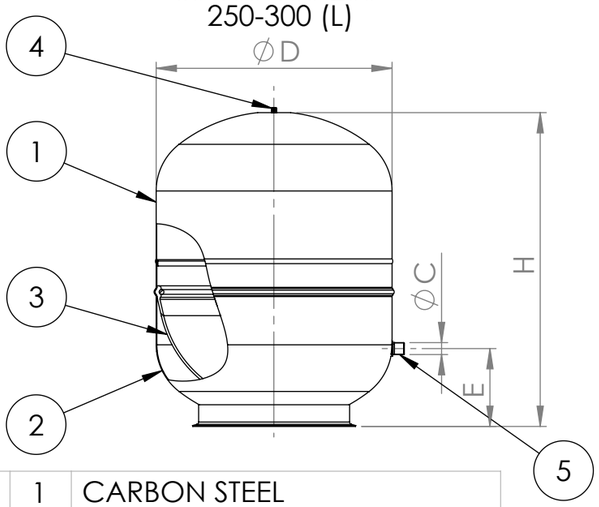

Pos.	Denomination	Q.ty	Material
1	UPPER HEAD	1	CARBON STEEL
2	DOWNER HEAD	1	CARBON STEEL
3	MEMBRANE	1	ZILAN N
4	PRECHARGE VALVE	1	-
5	THREADED NOZZLE	1	CARBON STEEL
6	SELF-ADHESIVE LABEL	1	-
7	-	-	-
8	-	-	-
9	-	-	-

Revisioni		
Rev.	Descrizione	Data
03	REDESIGNED WITH S.W.	12/05/2016

Zilmet S.p.a.
Via del Santo,242
35010 Limena (PD)-ITALY
Tel. +39 049 7664901
Fax +39 049 767321
www.zilmet.com
zilmet@zilmet.it

DRAWING N° **20013**

SCALE 1:13

MATERIAL --

*:Tolerance variation bigger/lower than 20% do not compromise the expansion vessel functioning

DRAWN BALDO A.	DATE 12/05/2016	SIGNATURE
CHECKED FALCOMER S.	DATE 12/05/2016	SIGNATURE
APPROVED Sri. BENETTOLO	DATE 12/05/2016	SIGNATURE

DENOMINATION
ZILFLEX H EXPANSION VESSEL FOR HEATING SYSTEM

CODE **130200----**

Dimensions in mm

This drawing is the property of company Zilmet S.p.a. All rights reserved.

A3

All dimension tolerances not indicated are ± 2% for lenght and ± 3mm for diameter